Novatik METAL | CLASSIC

Novatik METAL | SLATE

Novatik METAL | WOOD

Novatik METAL | KOLAJ

INSTALLATION GUIDE

INTERLOCKING STEEL ROOF SYSTEMS

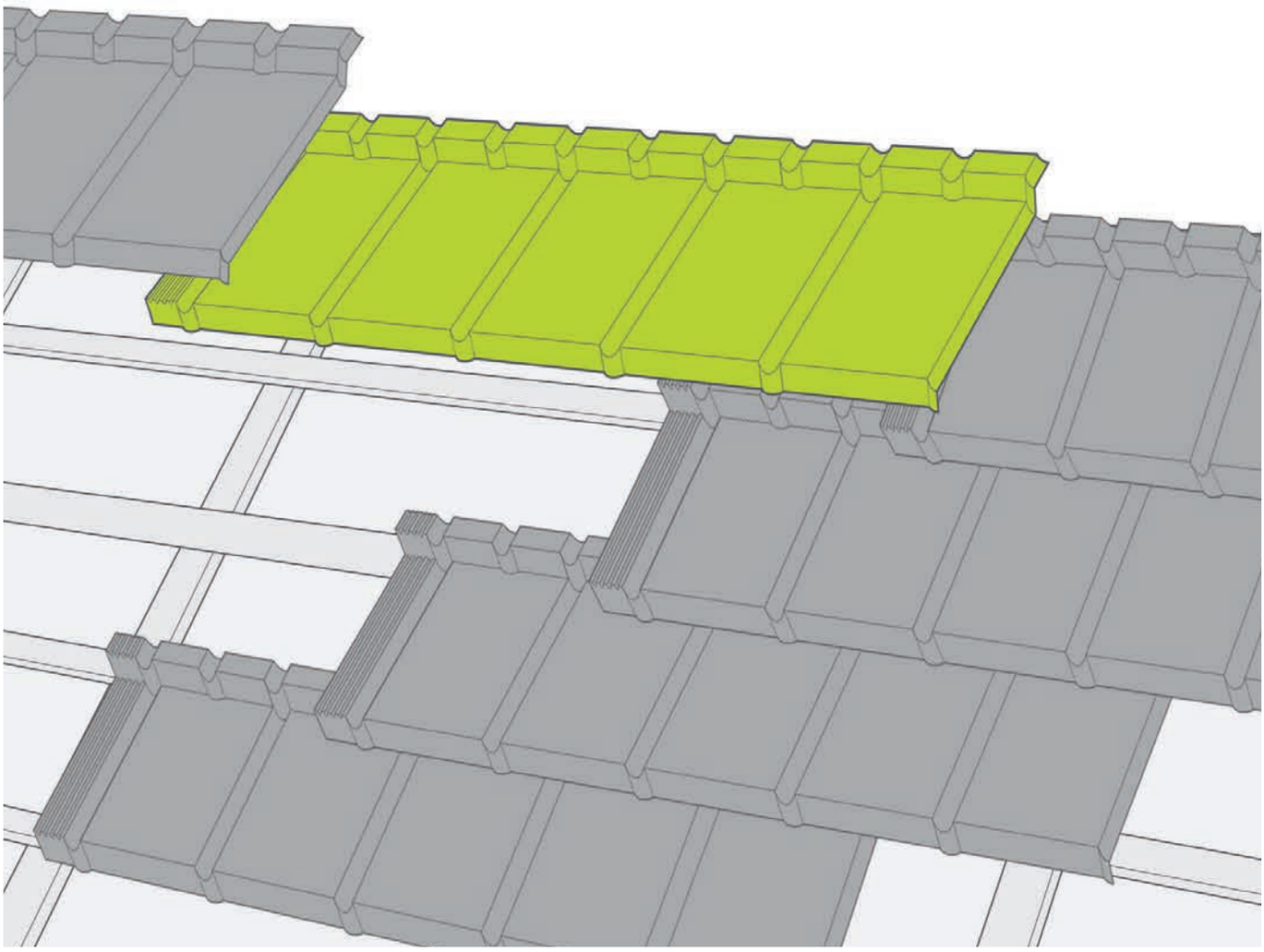

Novatik®

"A ROOF FOR NINE LIVES,
GUARANTEED BY THE EXPERTS!"

NOVATIK.RO

IMPORTANT DATA

>STORAGE

If the product is stored outside, an impermeable sheet has to be laid over the tiles so as to keep them dry and prevent the under-side damage. No more than 2 pallets high shall be stacked during transportation.

>MINIMUM INSTALLATION PITCH

Novatik METAL CLASSIC tiles can be installed on roofs with an angle between 12 and 90 degrees, Novatik METAL SLATE, Novatik METAL KOLAJ tiles and Novatik METAL WOOD tiles can be installed on roofs with an angle between 16 and 90 degrees.

CLASSIC
12°-90°

SLATE/WOOD/KOLAJ
16°-90°

>NON COMPATIBLE ACCESSORIES

Upon fixing of other Novatik accessories or gutters above the roof level, it is recommended not to use materials that can cause corrosion damages through corrosion. (e.g. copper, stainless steel, etc.).

> ROOF TRAFFIC

People walking on the roofed area should wear soft rubber sole shoes. When walking on the roof, step on the pan in the front of the modules, which is supported by battens. You will thus avoid possible module deformation. Roof traffic should be maintained to a minimum in order to avoid tile damage. The modules have to be fixed progressively, from the ridge of the roof towards the (eaves), so the completed sections are not walked on more than necessary during installation.

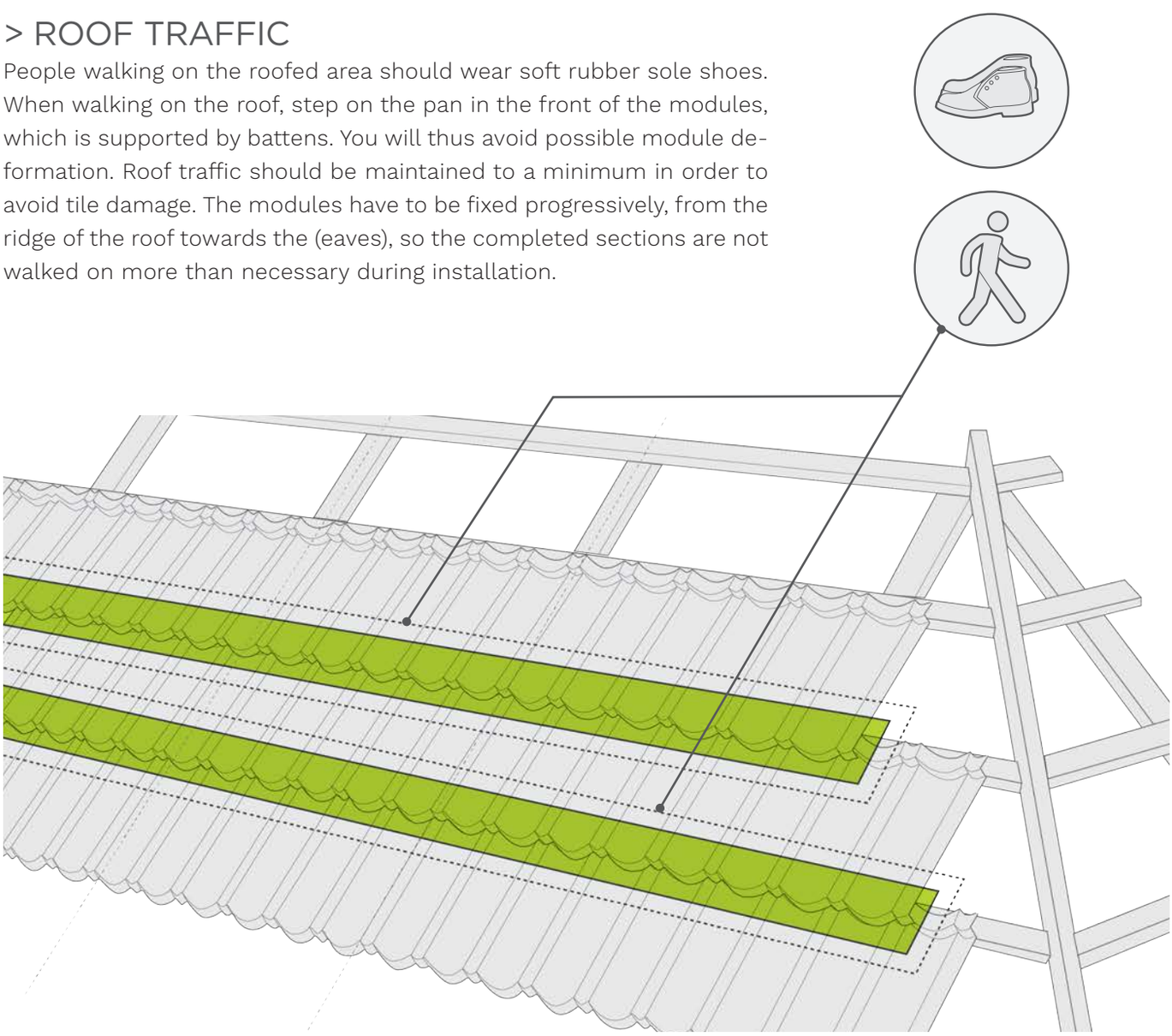

>NON-COMPLIANT TOOLS

Novatik steel tiles should only be installed with tools recommended by Novatik. Tools generating heat upon cutting, as well as angle grinders should not be used, as they trigger the delamination of the coating layers, which will corrode, in time.

>LIABILITY

The architect, builders and roof installers are committed to ensuring that all roof elements (e.g. anti-condensation sheet, counter-battens heat insulation and vapors barrier) are adequately fixed.

>PACKAGING

The tiles are stacked on wooden pallets and wrapped in customized plastic sheeting and the accessories are packaged in stretchwrap. One pallet contains 400 Novatik tiles which correspond to a roof area of approx. 186 sqm for Novatik METAL CLASSIC and about 184 sqm for Novatik METAL SLATE and Novatik METAL WOOD.A tile pallet base measures 1400 x 1080 mm, with 400 mm in height. The weight of a complete pallet is maximum 985 kg.

1 PALLET:

400 NOVATIK MODULES
WEIGHT 985 KG
LENGTH 1400 MM
WIDTH 1080 MM
HEIGHT 400 MM

1 PALLET COVERAGE:

CLASSIC
186 SQM

SLATE/WOOD
184 SQM

> HANDLING

Tiles have to be handled with care, so as to avoid surface coating damage. In the case of minor damage, it can be remedied with the touchup spray.

> RECOMMENDED TOOLS

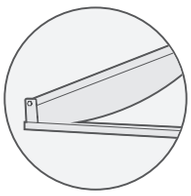

GUILLOTINE

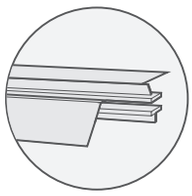

BENDER

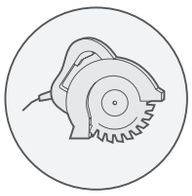

CIRCULAR METAL SAW BLADE

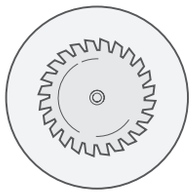

CIRCULAR METAL DISK

HAMMER

HAND BENDER

HAND SNIPS

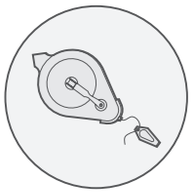

PLOTTING WIRE DEVICE

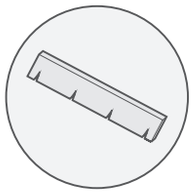

HORIZONTAL CLEAVES FASTEN-ING CALIBER

SQUARE

MEASURING TAPE

NAIL GUN

SOFT SOLE LEATHER FOOTWEAR

FIXING USING ELECTRIC POWER DRILL

Novatik METAL | CLASSIC

>DISTINCT PROFILE

Novatik metal roof tiles have been designed to give the aesthetic appearance of ceramic tiles, but with an original profile.
Advantages of tile's design and dimensions:
- Easy handling;
- Reduced storage space;
- Reduced transport costs due to low weight;
- Where access is difficult, smaller vehicles can be used;
- Easier installation and less breakages, especially on complex roofs.

>LOW WEIGHT

The optimal design of the tiles and their low weight, compared to traditional roofing materials, provides great opportunity in the design stage to make substantial savings, by reducing the weight and dimensions of the roof substructure, without compromising the structural integrity of the roof.

>STRONG & SECURE FASTENING SYSTEM

The tiles are fastened with nails or screws to the roof battens requiring no further components. The tiles are overlapped to create a perfect interlocked system, which is completely secure and waterproof. Novatik roofing system is one of the most secure and durable systems available.

>EASY INSTALLATION

The tiles can be overlapped in both directions (from left to right or from right to left), thus reducing installation time and costs.

>LAYERS

finishing MAT/HIGH COAT/FROST

1. **MAT**: Polyester Mat 35 µm;
HIGH COAT: Polyurethan - Polyamid 50 µm;
FROST: Polyurethan 60 µm;
(on the front side of the tile);
2. Primer;
3. Protective layer of: ZnMg | Zn;
4. Steel;
5. Protective layer of: ZnMg | Zn;
6. **MAT**: Polyester 10 µm / 7 µm;
HIGH COAT: Epoxid 10 µm;
FROST: Epoxid 12 µm;
(on the back side of the tile).

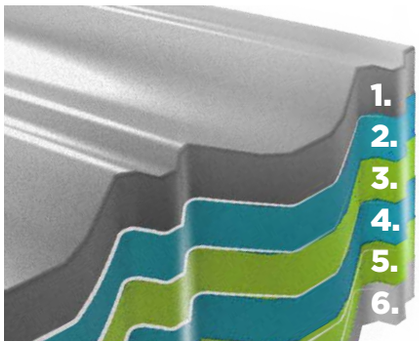

*More TECHNICAL INFORMATION - pg. 8-10

Novatik METAL | CLASSIC MAT

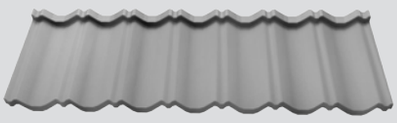

0.5 mm	
20 YEARS AESTHETIC WARRANTY	30 YEARS TECHNICAL WARRANTY

0.6 mm	
20 YEARS AESTHETIC WARRANTY	40 YEARS TECHNICAL WARRANTY

Novatik METAL | CLASSIC HIGH COAT

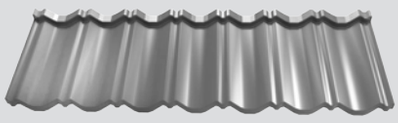

0.5 mm	
20 YEARS AESTHETIC WARRANTY	40 YEARS TECHNICAL WARRANTY

Novatik METAL | CLASSIC FROST

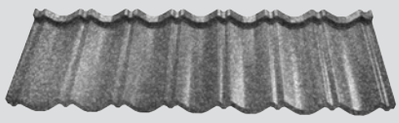

0.5 mm	
20 YEARS AESTHETIC WARRANTY	40 YEARS TECHNICAL WARRANTY

Novatik METAL | SLATE

>SPECIAL PROFILE

Novatik METAL SLATE profile was created to combine natural slate look with the advantages of modern materials. With Novatik METAL SLATE you will have a roof with a simple design, functional aesthetics, minimalist and without unnecessary architectural elements. Strong linear elements and bold horizontal lines make Novatik METAL SLATE roof the ideal choice for all types of constructions and renovations. Smooth surfaces and reduced height of the profile are very suitable for roofs with complex geometry and at least 16^{0} pitch.

>MODERN TECHNOLOGY

The modern technology for manufacturing the tiles offers Novatik METAL SLATE a great finish, achieving perfect interlocking of modules during installation, thus reducing the risk of leakage and making it one of the most secure roofing systems on the market. The tiles are fixed with nails or screws with a minimum density of 8 units/sqm.

>ADVANTAGES

- Reduced technological losses for roofs with a complex architecture;
- Flawless finish;
- Natural Slate look;
- Durable, lightweight system for easy, quick and safe installation;
- High resistance to fire, to extreme high winds and heavy snow loadings;
- The unique horizontal fixing system provides extra security against leakage and ensures that each tile remains in place in extreme high winds conditions;
- Low maintenance;
- 100% recyclable.

>LAYERS

finishing MAT/HIGH COAT/FROST

1. **MAT**: Polyester Mat 35 µm;
HIGH COAT: Polyurethan - Polyamid 50 µm;
FROST: Polyurethan 60 µm;
(on the front side of the tile);
2. Primer;
3. Protective layer of: ZnMg | Zn;
4. Steel;
5. Protective layer of: ZnMg | Zn;
6. **MAT**: Polyester 10 µm / 7 µm;
HIGH COAT: Epoxid 10 µm;
FROST: Epoxid 12 µm;
(on the back side of the tile).

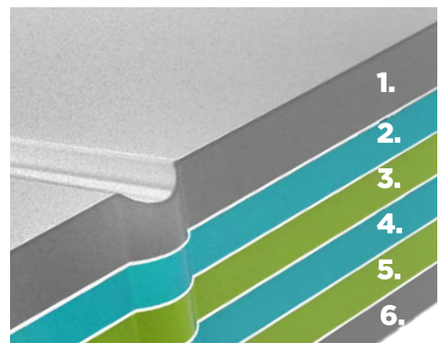

*More TECHNICAL INFORMATION - pg. 8-10

Novatik METAL | SLATE MAT

0.5 mm	
20 YEARS AESTHETIC WARRANTY	30 YEARS TECHNICAL WARRANTY

0.6 mm	
20 YEARS AESTHETIC WARRANTY	40 YEARS TECHNICAL WARRANTY

Novatik METAL | SLATE HIGH COAT

0.5 mm	
20 YEARS AESTHETIC WARRANTY	40 YEARS TECHNICAL WARRANTY

Novatik METAL | SLATE FROST

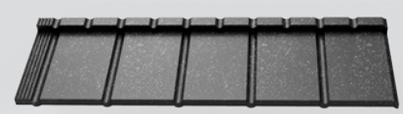

0.5 mm	
20 YEARS AESTHETIC WARRANTY	40 YEARS TECHNICAL WARRANTY

Novatik METAL | WOOD

>TRADITIONAL BEAUTY

The natural beauty of a wood shingle roof is completely recreated with our newest profile - Novatik METAL WOOD - while keeping all the advantages of metal tiles (lightweight, high corrosion protection, lasting strength and durability). Unlike traditional wooden shingles, which require maintenance or replacements, Novatik METAL WOOD shingles need very low maintenance.

>MODERN TECHNOLOGY

The protection provided by the ZnMg coating ensures a high corrosion resistance and better performance in different extreme weather conditions, compared to galvanized steel. Providing installation according to our specifications, we offer 15 years aesthetic warranty and 30 years technical warranty.

Each Novatik METAL WOOD tile is made using modern metal pressing technology resulting a deep wood grain impression, which makes the shingle look so unique. The tiles are fixed with nails or screws with a minimum density of 8 units/sqm.

>ADVANTAGES

- Aesthetic appearance of wooden shingles;
- Great finishing;
- Fast and secure installation;
- Durable and lightweight system;
- Low maintenance;
- 100% recyclable;
- The symmetry of the tiles allows installation from both directions (from left to right or right to left), providing invisible overlapping;
- High resistance to impact, to high speed winds or powerful storms and snow loadings.

>LAYERS

finishing MAT/HIGH COAT/FROST

1. **MAT**: Polyester Mat 35 µm;
HIGH COAT: Polyurethan - Polyamid 50 µm;
FROST: Polyurethan 60 µm;
(on the front side of the tile);
2. Primer;
3. Protective layer of: ZnMg | Zn;
4. Steel;
5. Protective layer of: ZnMg | Zn;
6. **MAT**: Polyester 10 µm / 7 µm;
HIGH COAT: Epoxid 10 µm;
FROST: Epoxid 12 µm;
(on the back side of the tile).

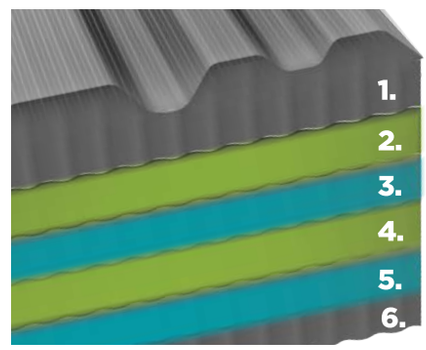

*More TECHNICAL INFORMATION - pg. 8-10

Novatik METAL | WOOD MAT

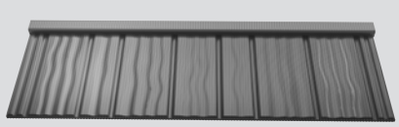

0.5 mm	
20 YEARS AESTHETIC WARRANTY	30 YEARS TECHNICAL WARRANTY

0.6 mm	
20 YEARS AESTHETIC WARRANTY	40 YEARS TECHNICAL WARRANTY

Novatik METAL | WOOD HIGH COAT

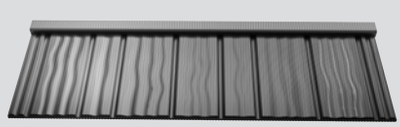

0.5 mm	
20 YEARS AESTHETIC WARRANTY	40 YEARS TECHNICAL WARRANTY

Novatik METAL | WOOD FROST

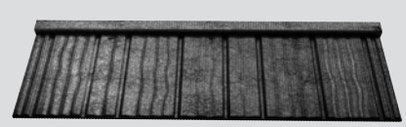

0.5 mm	
20 YEARS AESTHETIC WARRANTY	40 YEARS TECHNICAL WARRANTY

Novatik METAL | KOLAJ

>VERSATILE PROFILE

The Novatik METAL KOLAJ roof comes as a new option for architects and designers, manifestly outlining the new roof trends and bringing a strong addition particularly for the new constructions, targeting the minimalist style of modern projects.
Novatik METAL KOLAJ, a profile with emphasized horizontal lines, offers the roof a modern look, but, at the same time, a classic appearance, reminding of French mansard roofs or the stereotomy of the brick walls. It is a profile that particularly fits with the steep slope roofs, including for vertical cladding.

>INNOVATING TECHNOLOGY

The KOLAJ profile is defined as the product benefitting from the most recent Novatik innovations, which, under the appearance of a collage of special qualities and characteristics, accounts for a premium design product, setting a new quality standard on the European roof covering market

>STRONG AND SECURED FASTENING SYSTEM

It is a robust profile, employing the same horizontal grip specific to all Novatik profiles, with a firm installation by means of 12 fixing screws per square meter of roof, which provides an increased resistance against strong wind and extreme weather phenomena. The reduced size of the Novatik METAL KOLAJ module generates low technological losses and brings significant advantages in terms of storage, handling and transport.

>ADVANTAGES

The particular shape of the Novatik METAL KOLAJ profile ennobles the look of any home, transforming a simple roof into one excelling both in terms of design, but especially in functionality and safety. The two ways of installing the Novatik METAL KOLAJ profile offers multiple exposure possibilities by a simple and versatile installation: interlaced or linear.
The well-proportioned design and stratified, minimalist appearance are strengths appealing both for architects and developers, interested in innovating solutions, as well as for clients in search of a distinct roof, which would thoroughly reflect their lifestyle.

>LAYERS

finishing MAT/HIGH COAT/FROST

1. **MAT**: Polyester Mat 35 µm;
HIGH COAT: Polyurethan - Polyamid 50 µm;
FROST: Polyurethan 60 µm;
(on the front side of the tile);
2. Primer;
3. Protective layer of: ZnMg | Zn;
4. Steel;
5. Protective layer of: ZnMg | Zn;
6. **MAT**: Polyester 10 µm / 7 µm;
HIGH COAT: Epoxid 10 µm;
FROST: Epoxid 12 µm;
(on the back side of the tile).

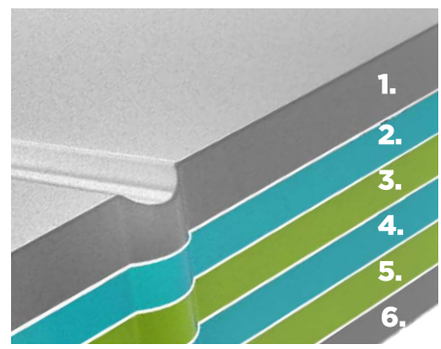

*More TECHNICAL INFORMATION - pg. 8-10

Novatik METAL | KOLAJ MAT

0.5 mm	
20 YEARS AESTHETIC WARRANTY	30 YEARS TECHNICAL WARRANTY

0.6 mm	
20 YEARS AESTHETIC WARRANTY	40 YEARS TECHNICAL WARRANTY

Novatik METAL | KOLAJ HIGH COAT

0.5 mm	
20 YEARS AESTHETIC WARRANTY	40 YEARS TECHNICAL WARRANTY

Novatik METAL | KOLAJ FROST

0.5 mm	
20 YEARS AESTHETIC WARRANTY	40 YEARS TECHNICAL WARRANTY

TECHNICAL INFORMATION

	Novatik CLASSIC MAT 	Novatik CLASSIC HIGH COAT 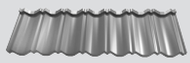	Novatik CLASSIC FROST 	Novatik SLATE MAT 
TOTAL LENGTH	1 340 mm	1 340 mm	1 340 mm	1 280 mm
LENGTH OF COVER	1 260 mm	1 260 mm	1 260 mm	1 225 mm
WIDTH OF COVER	370 mm	370 mm	370 mm	370 mm
TILES/SQM	2,15 modules	2,15 modules	2,15 modules	2,17 modules
ROOF PITCH	Min 12°	Min 12°	Min 12°	Min 16°
THICKNESS (STEEL + ORGANIC COATINGS)	0,50 / 0,60 mm	0,51 mm	0,50 mm	0,50/0,60 mm
WEIGHT / SQM	4,74 kg/sqm	4,96 kg/sqm	4,96 kg/sqm	4,61 kg/sqm
LOOK	MAT	GLOSSY	CRYSTALLIZED	MAT
SURFACE COATING	Polyester Mat **35 microns** on the front side of the tile	Polyurethan/Polyamid **50 microns** on the front side of the tile	Polyurethan **60 microns** on the front side of the tile	Polyester Mat **35 microns** on the front side of the tile
PROTECTION LAYER	Lack polyester of **10/7 microns** on the back side of the tile	Lack Epoxid of **10 microns** on the back side of the tile	Lack Epoxid of **12 microns** on the back side of the tile	Lack polyester of **10/7 microns** on the back side of the tile
RAW MATERIAL	Steel with protective coating of **ZnMg 120g/sqm /Zn 275 g/sqm**	Steel with protective coating of **Zn 275 g/sqm /ZnMg 120 g/sqm**	Steel with protective coating of **Zn 275 g/sqm**	Steel with protective coating of **ZnMg 120g/sqm /Zn 275 g/sqm**
AESTHETIC WARRANTY	20 YEARS (0.5 mm) 20 YEARS (0.6 mm)	20 years	20 years	20 YEARS (0.5 mm) 20 YEARS (0.6 mm)
TECHNICAL WARRANTY	30 YEARS (0.5 mm) 40 YEARS (0.6 mm)	40 years	40 years	30 YEARS (0.5 mm) 40 YEARS (0.6 mm)

Novatik SLATE HIGH COAT	Novatik SLATE FROST	Novatik WOOD MAT	Novatik WOOD HIGH COAT	Novatik WOOD FROST
			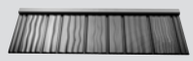	
1 280 mm	1 280 mm	1 375 mm	1 375 mm	1 375 mm
1 225 mm	1 225 mm	1 295 mm	1 295 mm	1 295 mm
370 mm	370 mm	370 mm	370 mm	370 mm
2,17 modules	2,17 modules	2,09 modules	2,09 modules	2,09 modules
Min 16°	Min 16°	Min 16°	Min 16°	Min 16°
0,51 mm	0,50 mm	0,50/0,60 mm	0,51 mm	0,50 mm
4,61 kg/sqm	4,61 kg/sqm	4,76 kg/sqm	4,76 kg/sqm	4,76 kg/sqm
GLOSSY	CRYSTALLIZED	MAT	GLOSSY	CRYSTALLIZED
Polyurethan/Polyamid **50 microns** on the front side of the tile	Polyurethan **60 microns** on the front side of the tile	Polyester Mat **35 microns** on the front side of the tile	Polyurethan/Polyamid **50 microns** on the front side of the tile	Polyurethan **60 microns** on the front side of the tile
Lack Epoxid of **10 microns** on the back side of the tile	Lack Epoxid of **12 microns** on the back side of the tile	Lack polyester of **10/7 microns** on the back side of the tile	Lack Epoxid of **10 microns** on the back side of the tile	Lack Epoxid of **12 microns** on the back side of the tile
Steel with protective coating of **Zn 275 g/sqm /ZnMg 120 g/sqm**	Steel with protective coating of **Zn 275 g/sqm**	Steel with protective coating of **ZnMg 120g/sqm /Zn 275 g/sqm**	Steel with protective coating of **Zn 275 g/sqm /ZnMg 120 g/sqm**	Steel with protective coating of **Zn 275 g/sqm**
20 years	20 years	20 YEARS (0.5 mm) 20 YEARS (0.6 mm)	20 years	20 years
40 years	40 years	30 YEARS (0.5 mm) 40 YEARS (0.6 mm)	40 years	40 years

TECHNICAL INFORMATION

	Novatik KOLAJ MAT 	Novatik KOLAJ HIGH COAT 	Novatik KOLAJ FROST 
TOTAL LENGTH	1 305 mm	1 305 mm	1 305 mm
LENGTH OF COVER	1 250 mm	1 250 mm	1 250 mm
WIDTH OF COVER	233 mm	233 mm	233 mm
TILES/SQM	3,43 modules	3,43 modules	3,43 modules
ROOF PITCH	Min. 16°	Min. 16°	Min. 16°
THICKNESS (STEEL + ORGANIC COATINGS)	0,50/0,60 mm	0,51 mm	0,50 mm
WEIGHT / SQM	5,43 kg/sqm	6,09 kg/sqm	5,29 kg/sqm
LOOK	MAT	GLOSSY	CRISTALLIZED
SURFACE COATING	Polyester Mat **35 microns** on the front side of the tile	Polyurethan/Polyamid **50 microns** on the front side of the tile	Polyurethan **60 microns** on the front side of the tile
PROTECTION LAYER	Lack polyester of **10/7 microns** on the back side of the tile	Lack Epoxid of **10 microns** on the back side of the tile	Lack Epoxid of **12 microns** on the back side of the tile
RAW MATERIAL	Steel with protective coating of **ZnMg 120g/sqm /Zn 275 g/sqm**	Steel with protective coating of **Zn 275 g/sqm /ZnMg 120 g/sqm**	Steel with protective coating of **Zn 275 g/sqm**
AESTHETIC WARRANTY	20 YEARS (0.5 mm) 20 YEARS (0.6 mm)	20 years	20 years
TECHNICAL WARRANTY	30 YEARS (0.5 mm) 40 YEARS (0.6 mm)	40 years	40 years

ACCESSORIES

Novatik METAL | CLASSIC	Novatik METAL | SLATE	Novatik METAL | WOOD	Novatik METAL | KOLAJ

1

CLASSIC SLATE WOOD KOLAJ

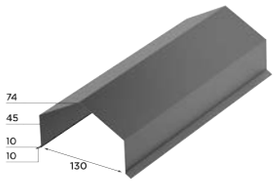

RECTANGULAR RIDGE

2

CLASSIC SLATE WOOD KOLAJ

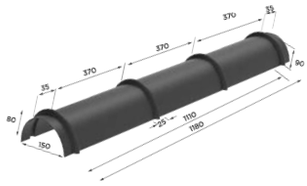

BARREL TRIM

3

CLASSIC SLATE WOOD KOLAJ

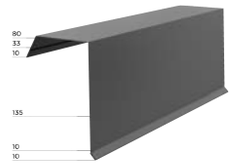

BOX BARDGE

4

CLASSIC SLATE WOOD

BOX BARGE SCRIBED RIGHT

5

CLASSIC SLATE WOOD

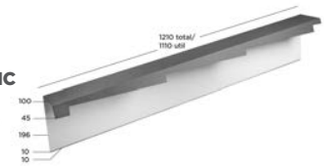

BOX BARGE SCRIBED LEFT

6

CLASSIC SLATE WOOD KOLAJ

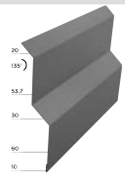

SIDE FLASHING

7

CLASSIC SLATE WOOD

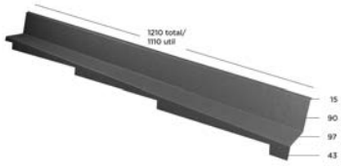

SIDE FLASHING SCRIBED RIGHT

8

CLASSIC SLATE WOOD

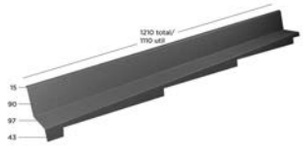

SIDE FLASHING SCRIBED LEFT

9

CLASSIC SLATE WOOD KOLAJ

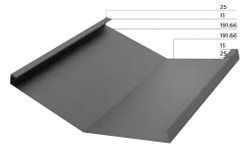

VALLEY

10

CLASSIC SLATE WOOD KOLAJ

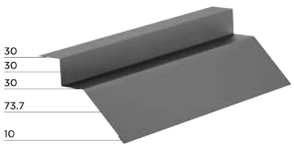

EAVES FLASHING

11

CLASSIC SLATE WOOD KOLAJ

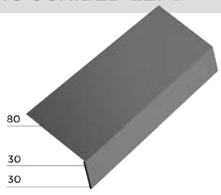

ANTI-CONDENSATION FLASHING

12 **CLASSIC/SLATE/ WOOD/KOLAJ**

SNOW GUARDS

13 **CLASSIC/SLATE/WOOD/CLICK**

SNOW STOPOERS SIGMA PROFILE

14 **ALL PROFILES**

NAIL SILING TAPE

15 **ALL PROFILES**

ROOFING MEMBRANE 115,140,160

16 **ALL PROFILES**

RIDGE VENTILATION ROL

17 **CLASSIC/SLATE/WOOD**

STEP

18 **ALL PROFILES**

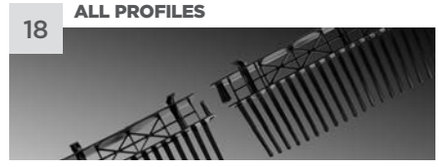

EAVES CLOSING COMB

19 **CLASSIC/SLATE/WOOD/CLICK**

SNOW STOPPERS

20 **CLASSIC/SLATE/WOOD/CLICK**

DRAINAGE MAT

21 **ALL PROFILES**

PERFORATED MESH TO PREVENT THE ENTRY OF BIRDS AND INSECTS

22 **CLASSIC/SLATE/WOOD/KOLAJ**

VENT / SANITARY VENT

Novatik offers a complete range of roofing accessories. Installing accessories correctly, ensures the roof is weatherproof and properly ventilated, as well as being visually appealing.

INSTALLING NOVATIK METAL TILES

>PREPARING SITE DOCUMENTATION

STEP 1

Prior to the completion of the site handover documentation the senior installer shall make sure that all his team members are trained according to the labour safety standards and are equipped with the specified operating and protection equipment (overalls, leather protection footwear with soft rubber sole, safety harnesses, protective goggles, safety helmet and ear protectors).

Documentation will state all height variations compared to the initial drawings or designs, any possible roof truss mounting, problems and/or configuration faults, as well as the way in which these non-compliances will be resolved. This documentation shall be signed by both parties.

>INSTALLING ANTI-CONDENSATION MEMBRANES

STEP 2

The first sheet layer shall be laid by unrolling in parallel with the eaves, leaving approximately 10 cm of sheet overlapping the eaves fascia board. The 3 cm of membrane are necessary for the event in which the anticondensation flashing is displaced to the exterior in order to allow the mounting of the wooden box barge to the eaves.

The next rows, up to the ridge, shall be laid overlapping onto the width of the marking printed on the membrane. In the absence of the marking, the overlapping shall not be of less than 10 cm. In the valley area, for higher safety and in order to avoid overlapping mistakes, a continuous sheet strip 75 cm wide shall be mounted (½ of the sheet roll width) on the entire length.

The side sheet rows shall overlap on this sheet up to no more than 10 cm of the valley axis. The sheet shall be fastened using the staple hammer. The staples shall be fastened in the roof timbers area so as to allow for vertical battens. In the case of valleys, the fastening shall be performed in the area to be protected by the steel valley bordering batten.

ATTENTION!

The fastening of the membrane in other areas than the indicated ones may lead to condensation problems. In the case of cold roofs (with ventilation layer above the thermal insulation) a ventilation space shall be allowed in the ridge area.

STEP 3

>VERTICAL BATTENS INSTALLING

The function of the vertical batten is to ensure a ventilation space underneath the roofing. The height of the vertical batten can range between 25 and 50 mm. Thicker battens increase the ventilation space, ensuring more efficient outlet of vapours crossing the anti-condensation sheet. The minimum recommended section is of 25 mm x 50 mm. For adequate air circulation, it has to enter at the eaves level and exit at the ridge level, through free spaces or through special ventilation accessories.

WARNING!

Before installing the vertical batten you should install the gutter brackets, first under the anti-condensation membrane, directly on the hard boarding. Then, the gutters and the respective accessories (gutter joints, miters, funnel pipes) have to be installed and after that the anticondensation flashing).
The vertical batten shall be installed over the anti-condensation sheet, in the area of each roof timber oriented towards the eaves towards the ridge– fig. 2. In case you use gutters of 125 mm it is recommended to install the vertical batten with 40 mm higher than the front eaves edge of the hard boarding.
The first horizontal batten shall be installed as well 40 mm higher. Such procedure becomes optional in the case of the 150 mm gutters.These represent preventive measures which are designed to prevent the overflow of the rainwater over the gutter in case of substantial rainfalls.
The absence of these battens leads to ventilation obstructions and, at the same time, to the retention of condensation by the horizontal battens.
The same batten size shall also be used for the valleys boarding. The battens bordering the valley shall be mounted with a distance of 195 mm on each side of the valley.

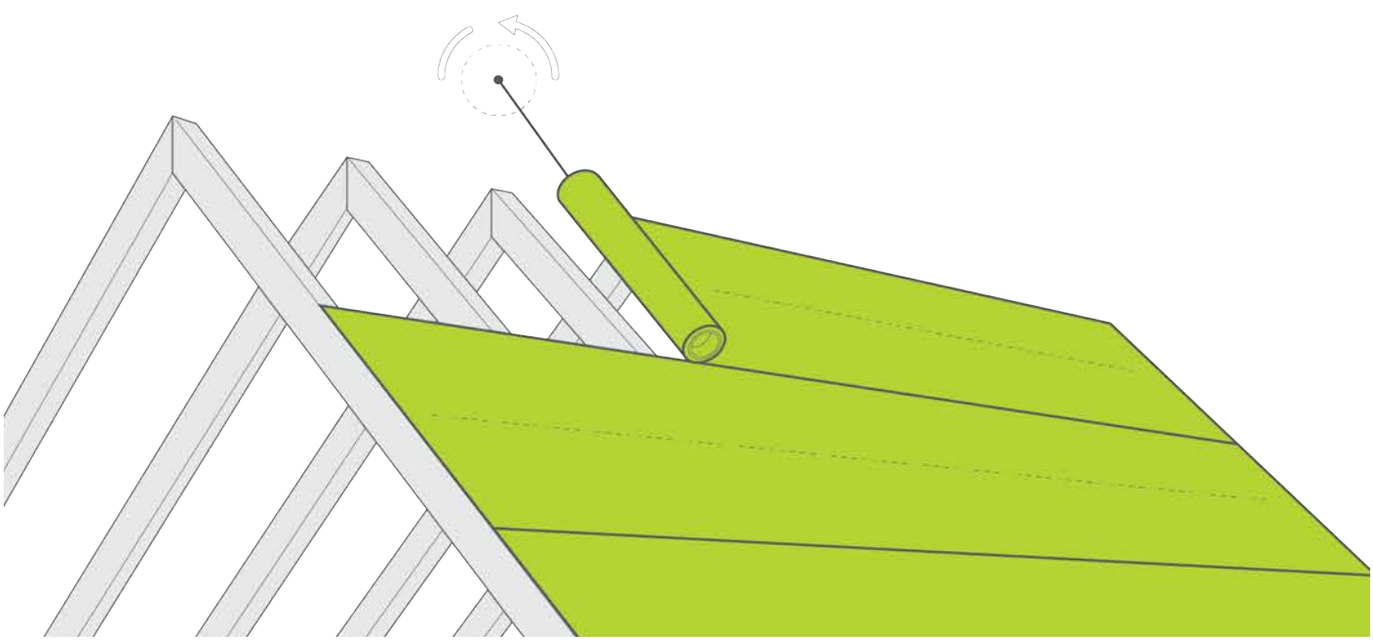

fig.1 MEMBRANE INSTALLING

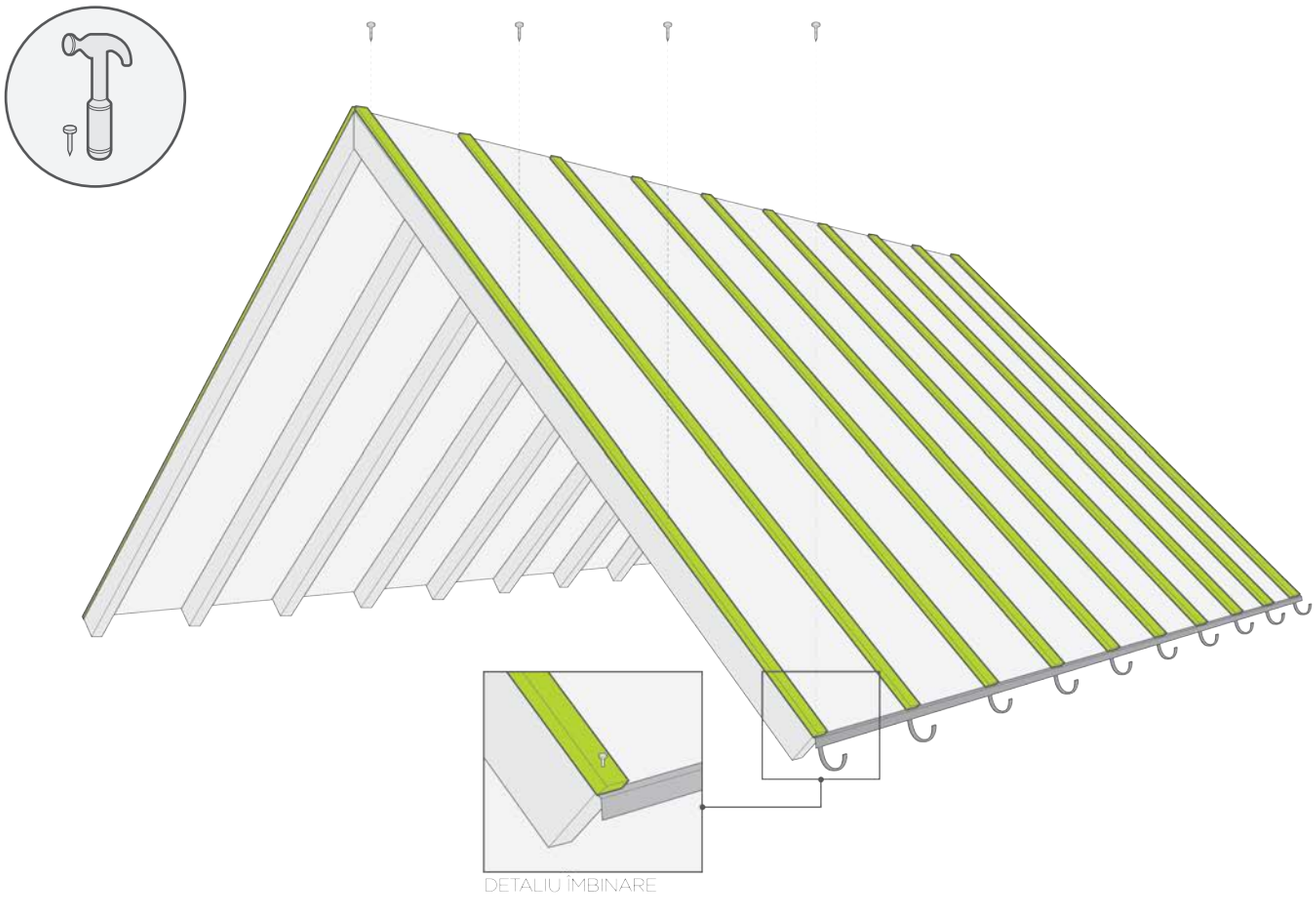

fig.2 INSTALLING OF THE VERTICAL BATTENS - BOUND DETAIL

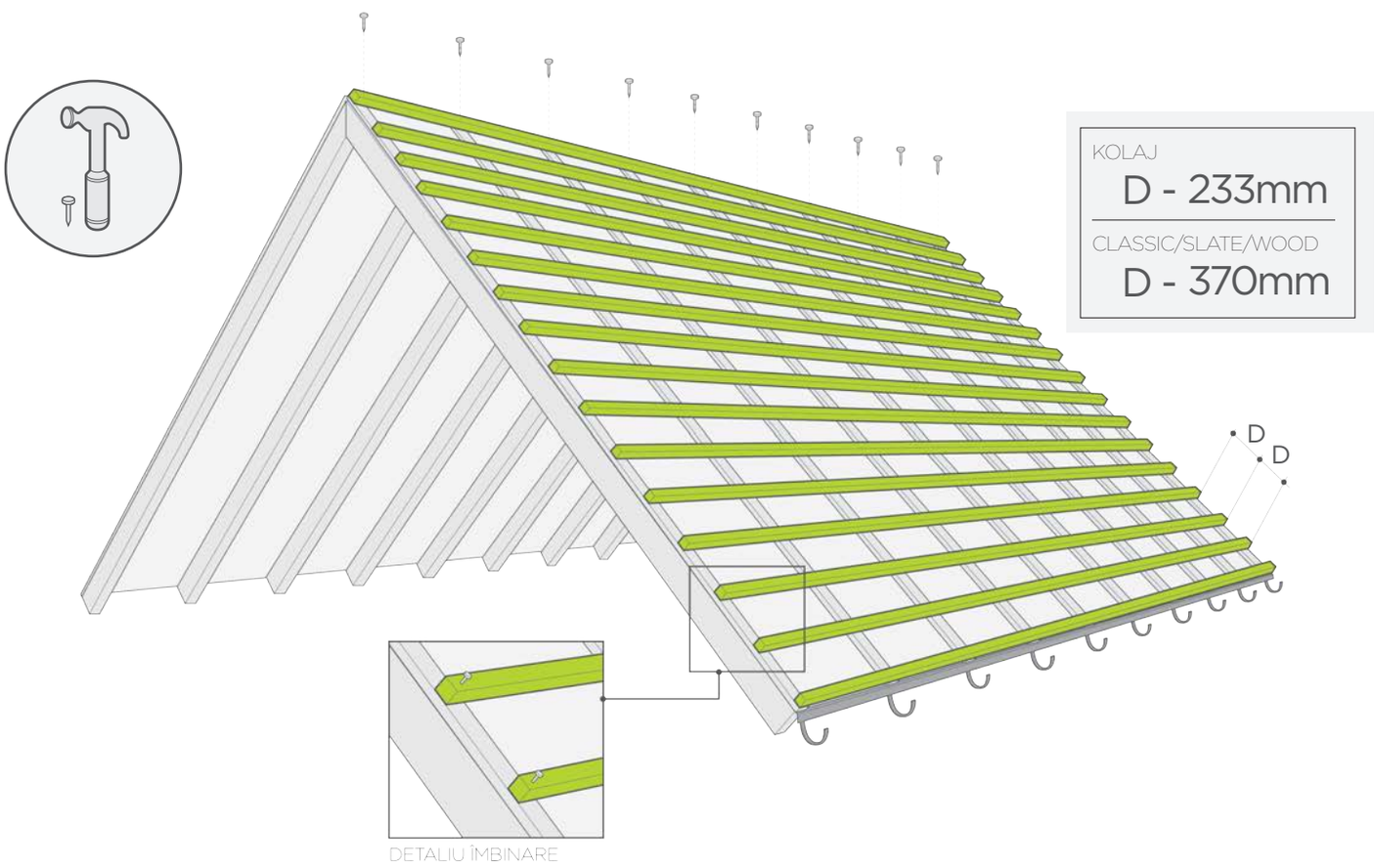

fig.3 INSTALLING OF THE HORIZONTAL BATTENS - BOUND DETAIL

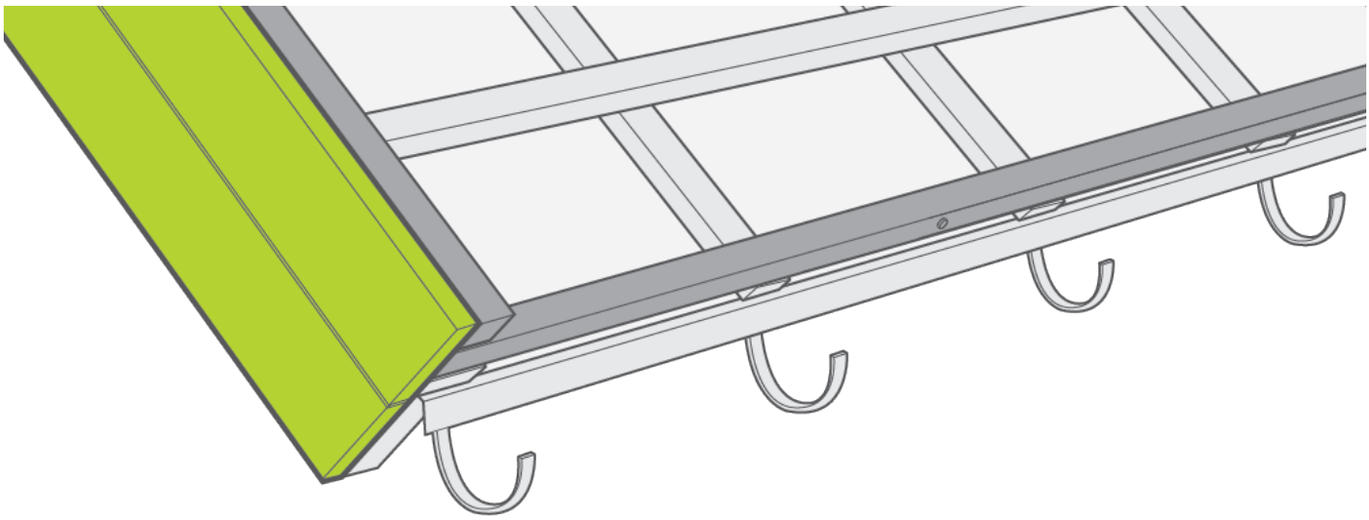

fig.4 INSTALLING BATTENS FOR EAVES APRON AND FASCIA BOARD

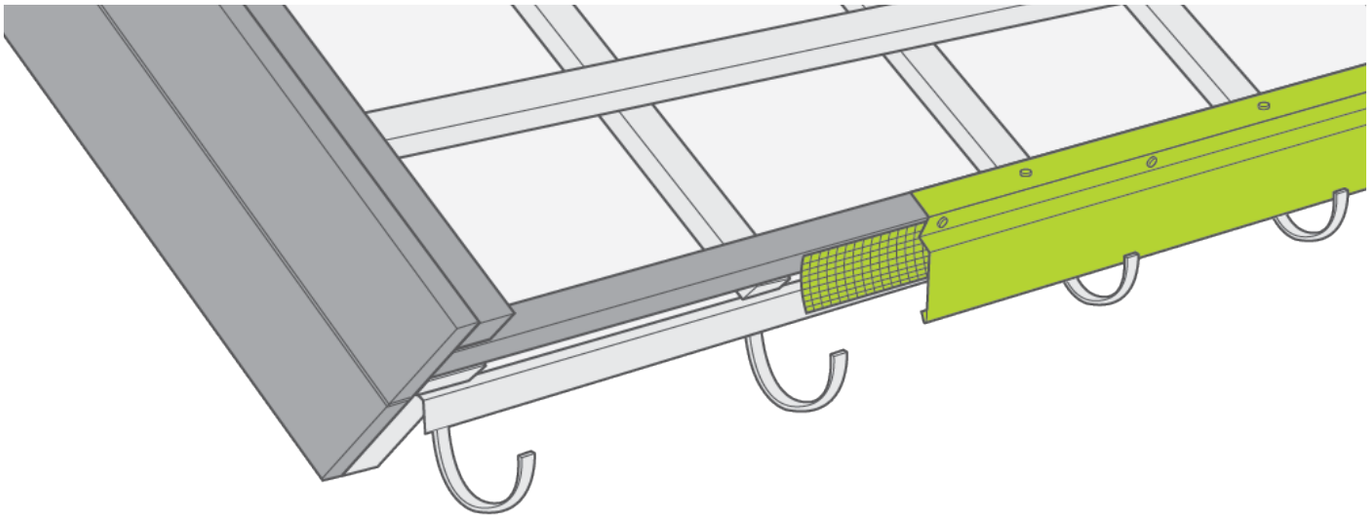

fig.5 5 INSTALLING BIRD PROTECTION GRID AND EAVES FLASHING

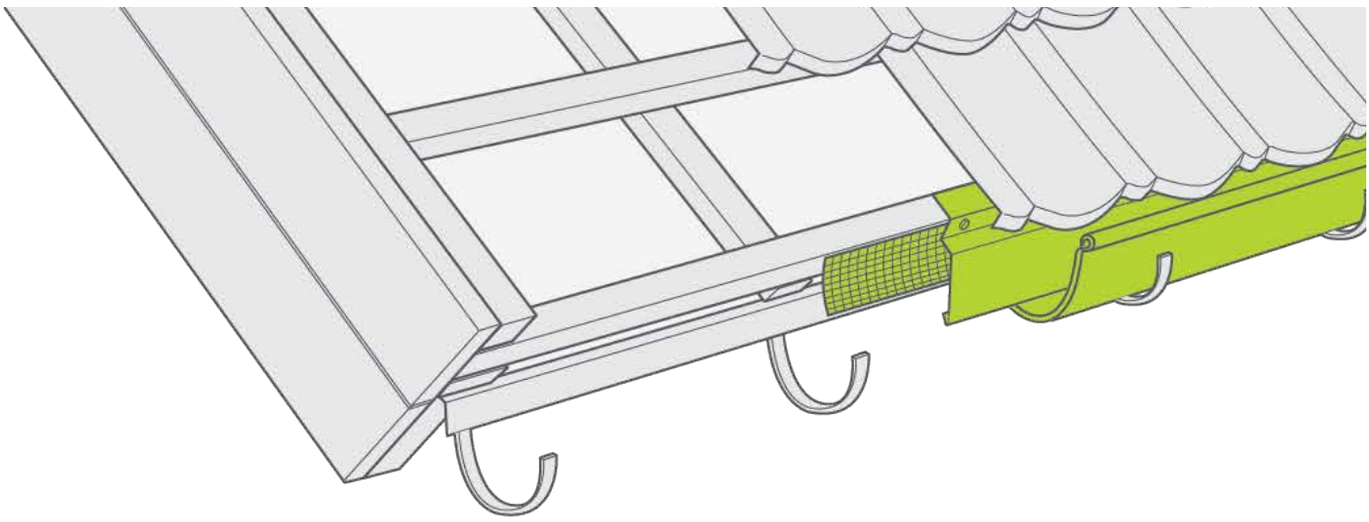

fig.6 EAVES DETAIL WITH ANTICODENSATION FLASHING, BIRD PROTECTION GRID AND EAVES FLASHING

>INSTALLING WITHOUT EAVES FLASHING

In the absence of the eaves flashing the vertical strips and the first horizontal batten/strip will be pulled back 40 mm towards the ridge. This way, the first horizontal batten will be protected by the direct action of humidity.

The first horizontal batten will have a height of 35 mm (5 mm smaller than the other vertical strips to maintain the same pitch). The next horizontal batten/strip will be installed at 330 mm (193 mm if Novatik METAL KOLAJ profile is installed) from the first strip (measuring from the bottom of the first batten to the bottom of the second strip).

Fixing the first module in the eaves area will be done at the first strip perpendicular/at right angles strip/batten to the surface module, about 40- 50 mm from the center of the concave area.

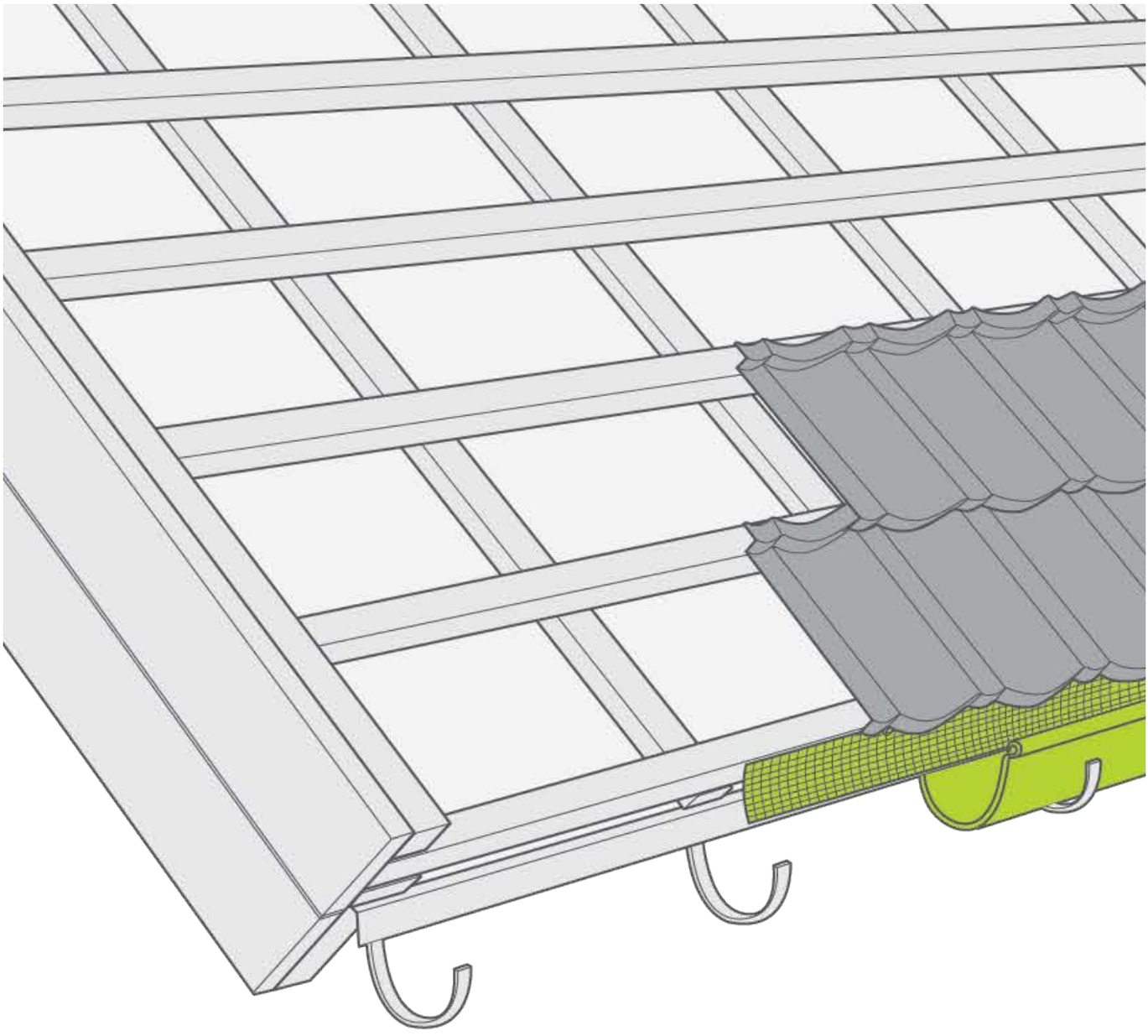

fig.7a INSTALLING OF HORIZONTAL BATTENS/STRIPS

>INSTALLING OF VERTICAL BATTENS - ALTERNATIVE

STEP 3.1

Succesion of the installing steps

1. **Anticodensation flashing**
2. **Roofing membrane**
3. **Vertical batten**
4. **Bird protection grid**
5. **Brackets**
6. **Horizontal batten**
7. **Gutter**
8. **Eaves flashing**
9. **Metal tile module**

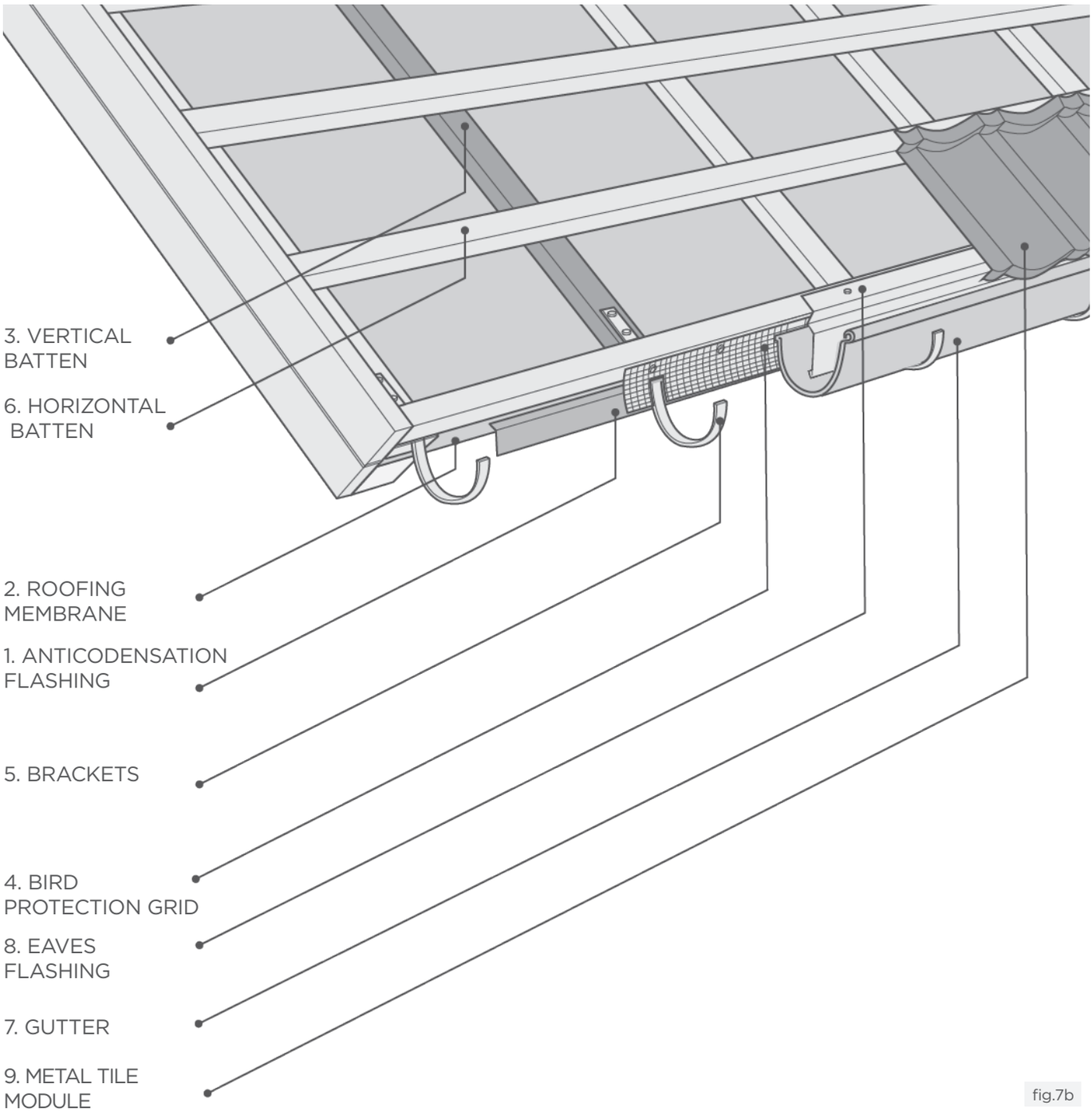

fig.7b

>FIXING VALLEYS

The valleys shall be installed from the downwards towards the ridge with an overlap of min. 100 mm on each valley section. They shall be fastened onto the boarding battens, using sheet clips.

STEP 4

fig.8 FIXING VALLEY AND HORIZONTAL BATTENS

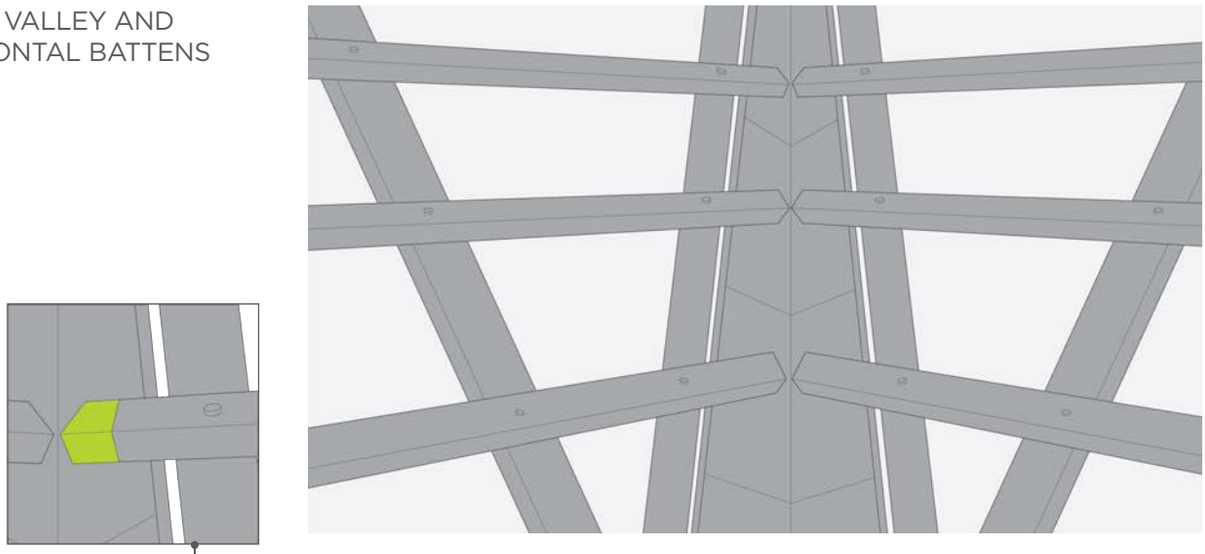

fig.9 LAYOUT OF HORIZONTAL BATTENS

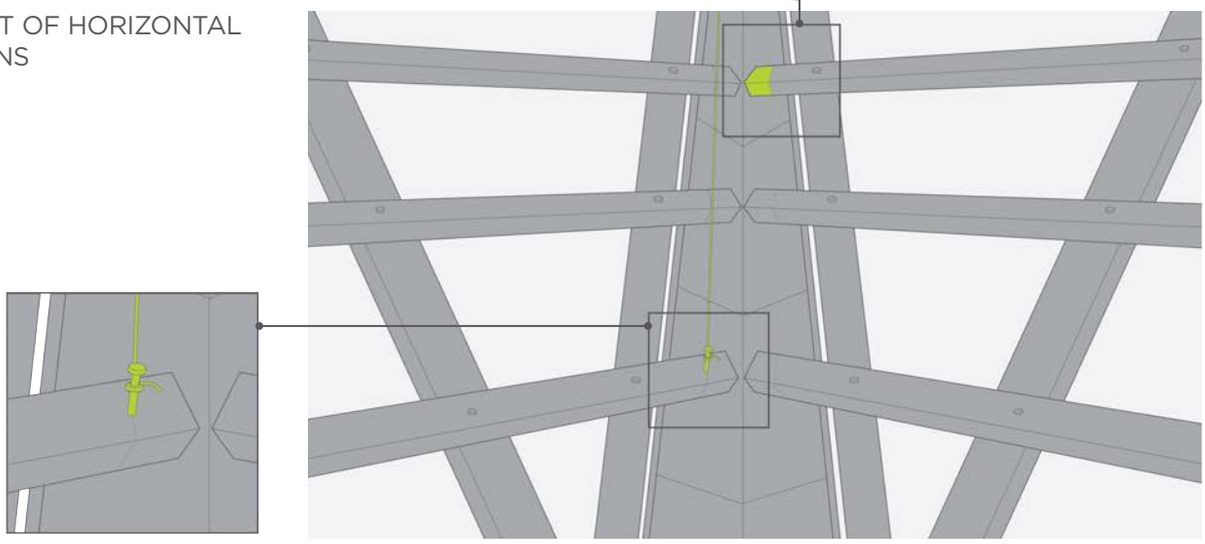

fig.10 HORIZONTAL BATTEN CUTTING

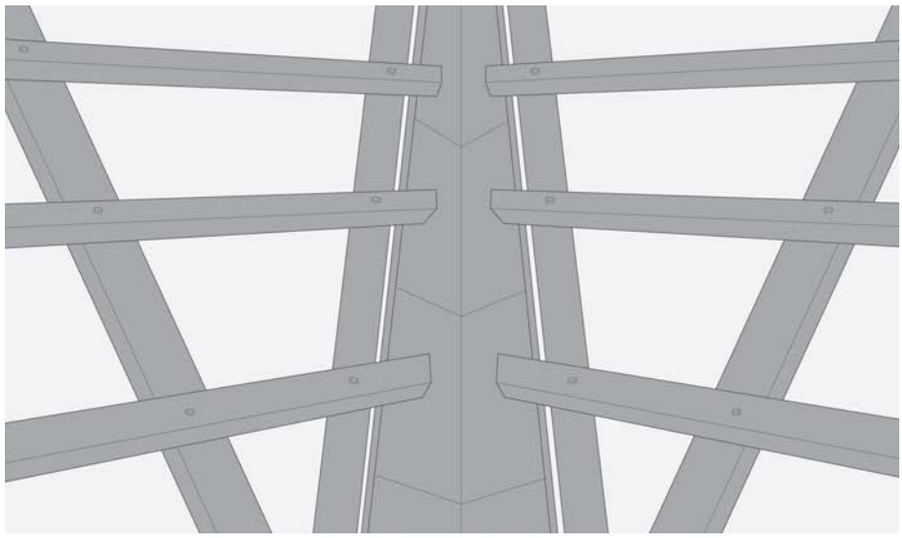

> INSTALLING HORIZONTAL BATTENS

STEP 5

The purpose of horizontal battens is to support the tiles and to allow for the fastening .They can have a section of 40 mm x 50 mm or of 50 mm x 50 mm and they are mounted from the eaves towards the ridge maintaining the distance of 370 mm / 233 mm (measured from the lower area of the battens). If the area to be covered is framed by valleys or by one valley and one box barge, the horizontal batten shall be installed from the upwards towards the downwards direction, reducing technological losses (which can sometimes be substantial). The same rule will apply for surfaces requiring water collection in the large funnel.

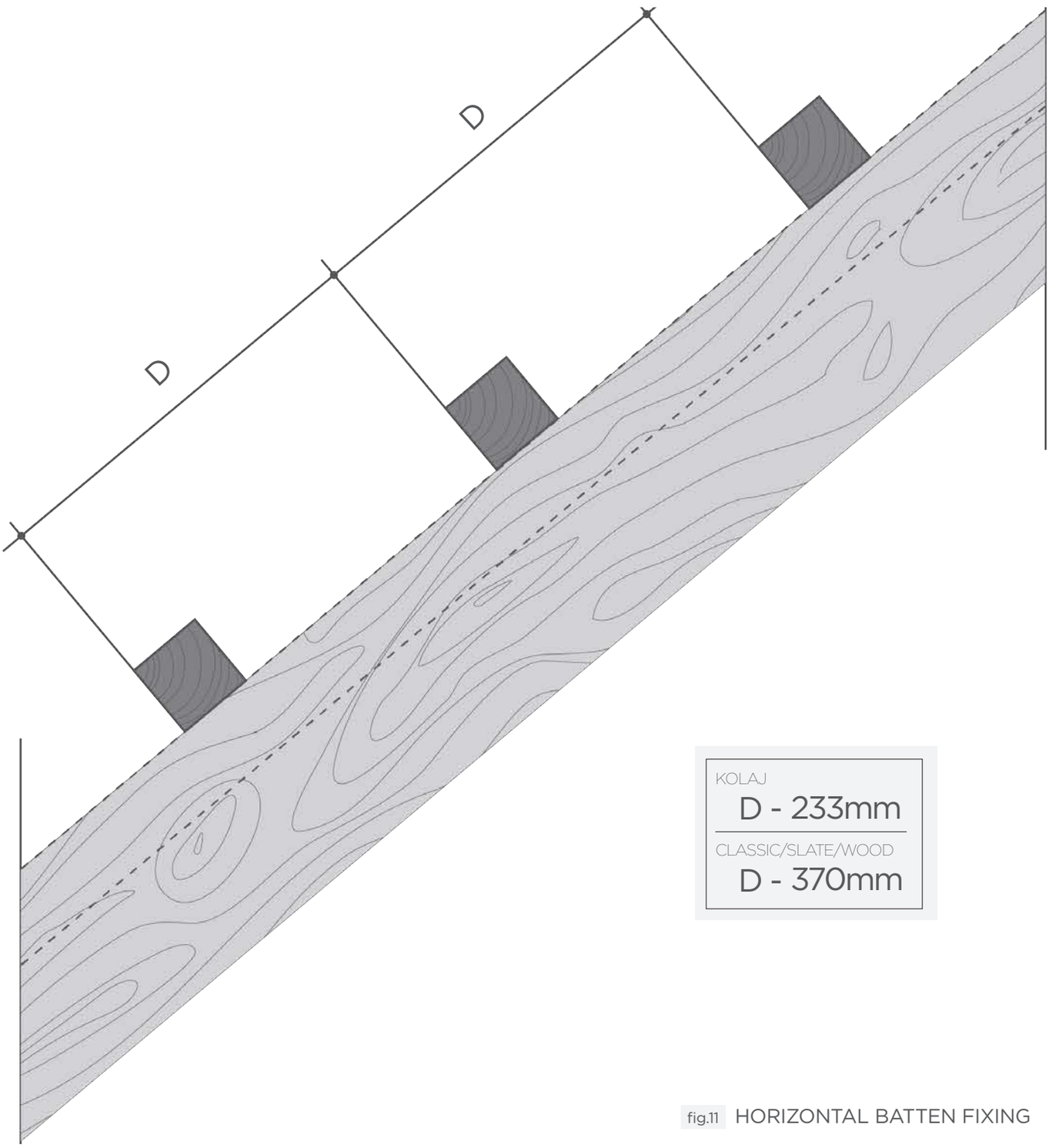

fig.11 HORIZONTAL BATTEN FIXING

> INSTALLING ADDITIONAL BATTENS

These can have a section of 40 mm x 50 mm or 50 mm x 50 mm.

STEP 6

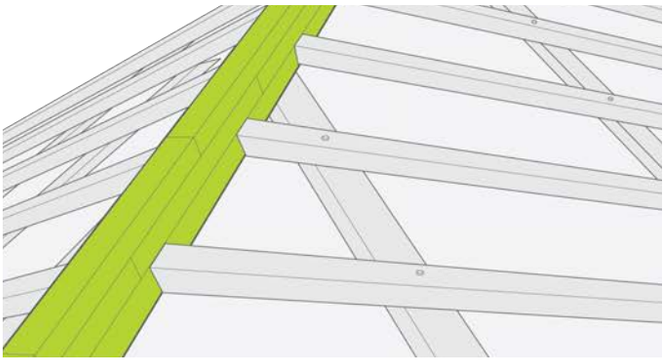

fig.12 FIXING BATTENS FOR A BEVELED RIDGE

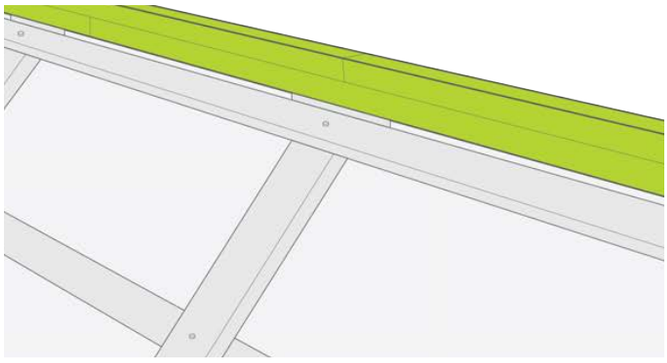

fig.13 FIXING BATTENS FOR A HORIZONTAL RIDGE

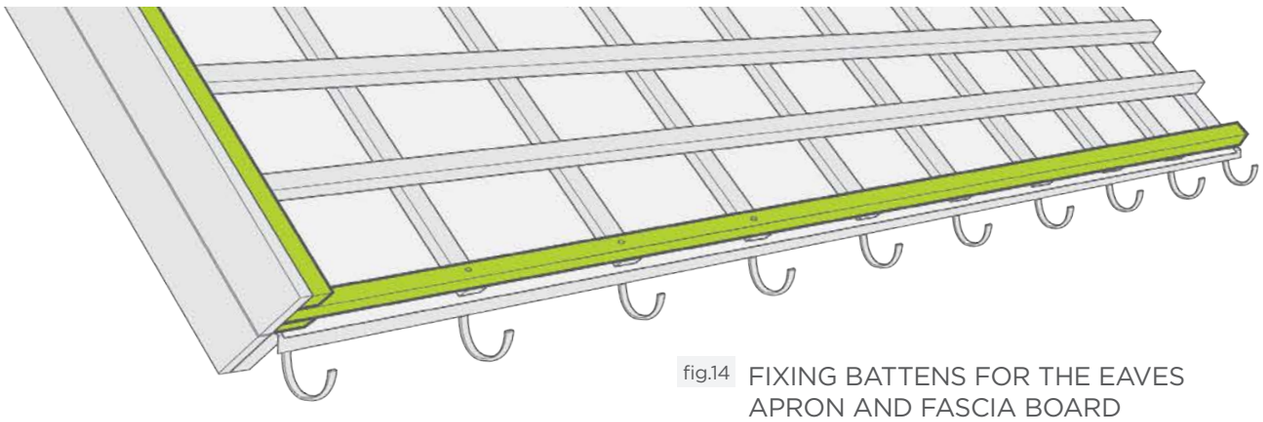

fig.14 FIXING BATTENS FOR THE EAVES APRON AND FASCIA BOARD

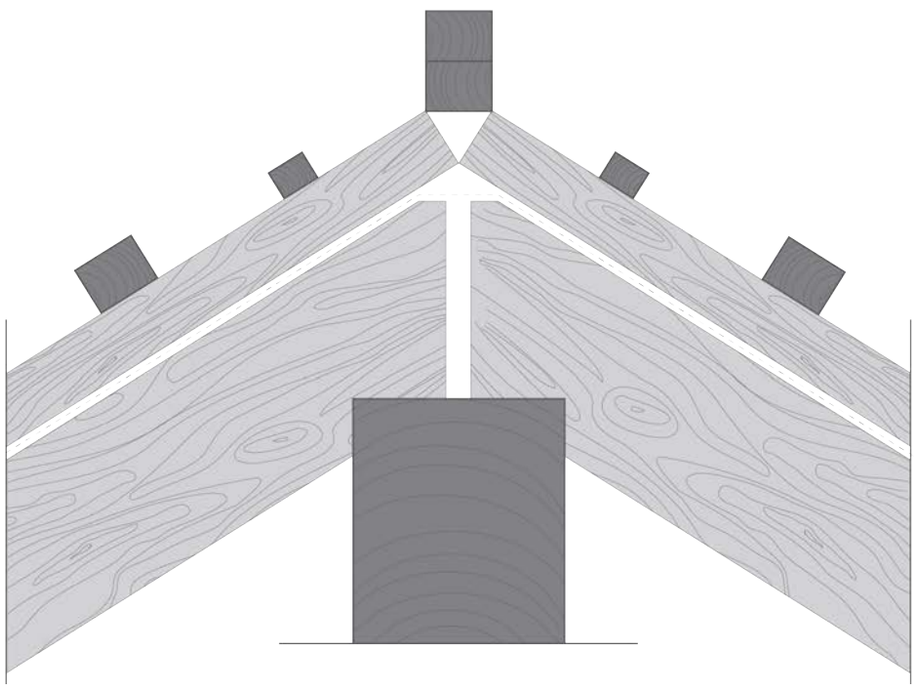

fig.15 FIXING BATTENS FOR A HORIZONTAL RIGDE – SECTION

> INSTALLING TILES

STEP 7

Place the tiles on the second row in the ridge area (see fig. 16a and 16b) and fasten as shown on fig. 17a and fig. 17b. The following rows will be fastened according to fig. 21a- 24b and can be performed for Novatik METAL CLASSIC using a 500 g hammer or nail gun.
For Novatik METAL SLATE, Novatik METAL KOLAJ or Novatik METAL WOOD the fastening will be done with screws with rubber/gasket, using an electric power drill. The modules shall be placed interlaced (see fig. 18a and fig. 18b).
For Novatik METAL CLASSIC and Novatik METAL WOOD, the overlapping can be done both to the left (fig. 19), and also to the right (fig. 20), but it shall be made in a single direction for each individual surface. For Novatik METAL SLATE, Novatik METAL KOLAJ, the overlapping can be done only to the right (fig. 18a and fig. 19a).
To ensure additional safety for installers, it is recommended not to step or work on the roof when wet.

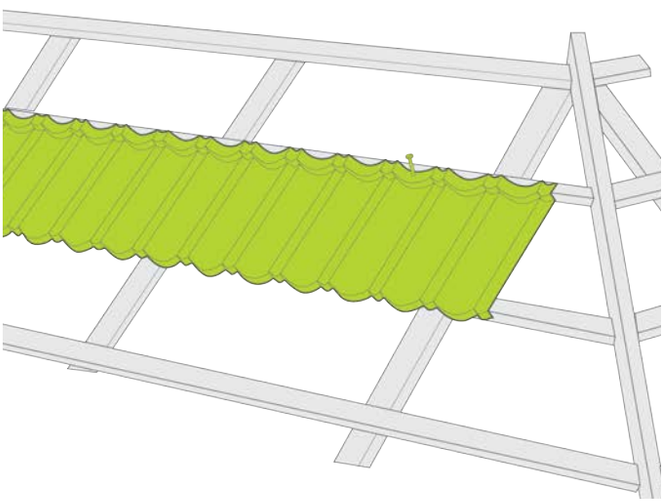

fig.16a INSTALLING OF ROW 2 IN THE RIDGE AREA

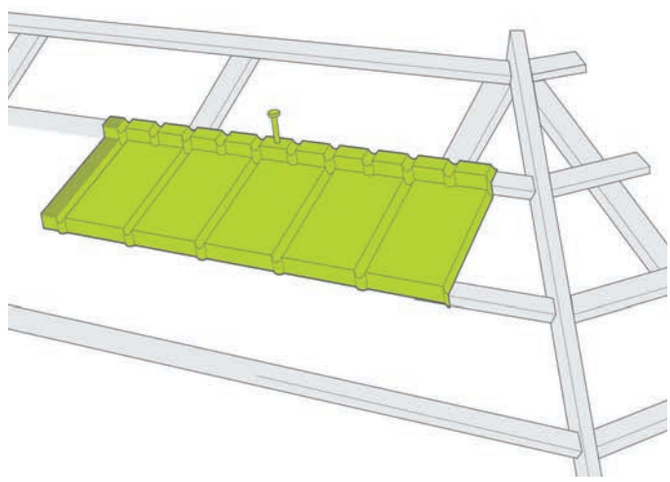

fig.16b INSTALLING OF ROW 2 IN THE RIDGE AREA

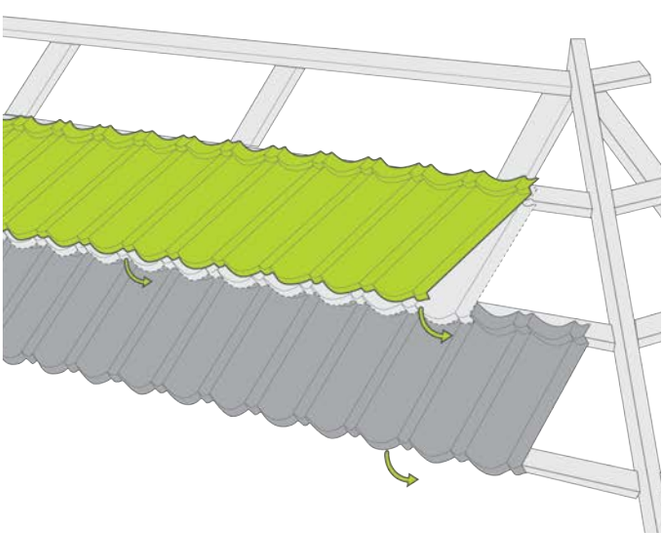

fig.17a ROWS OVERLAPPING

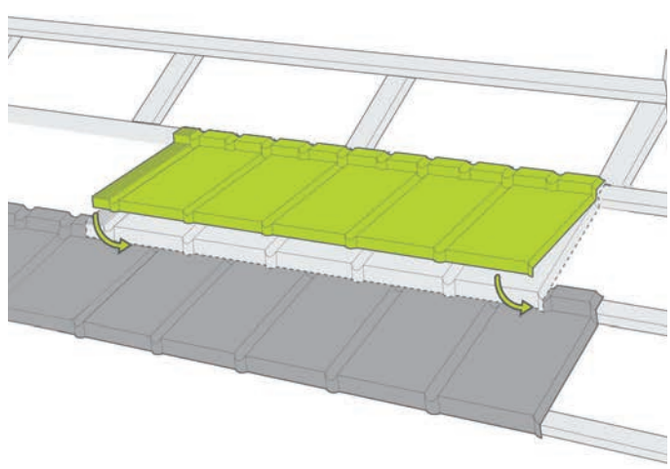

fig.17b ROWS OVERLAPPING

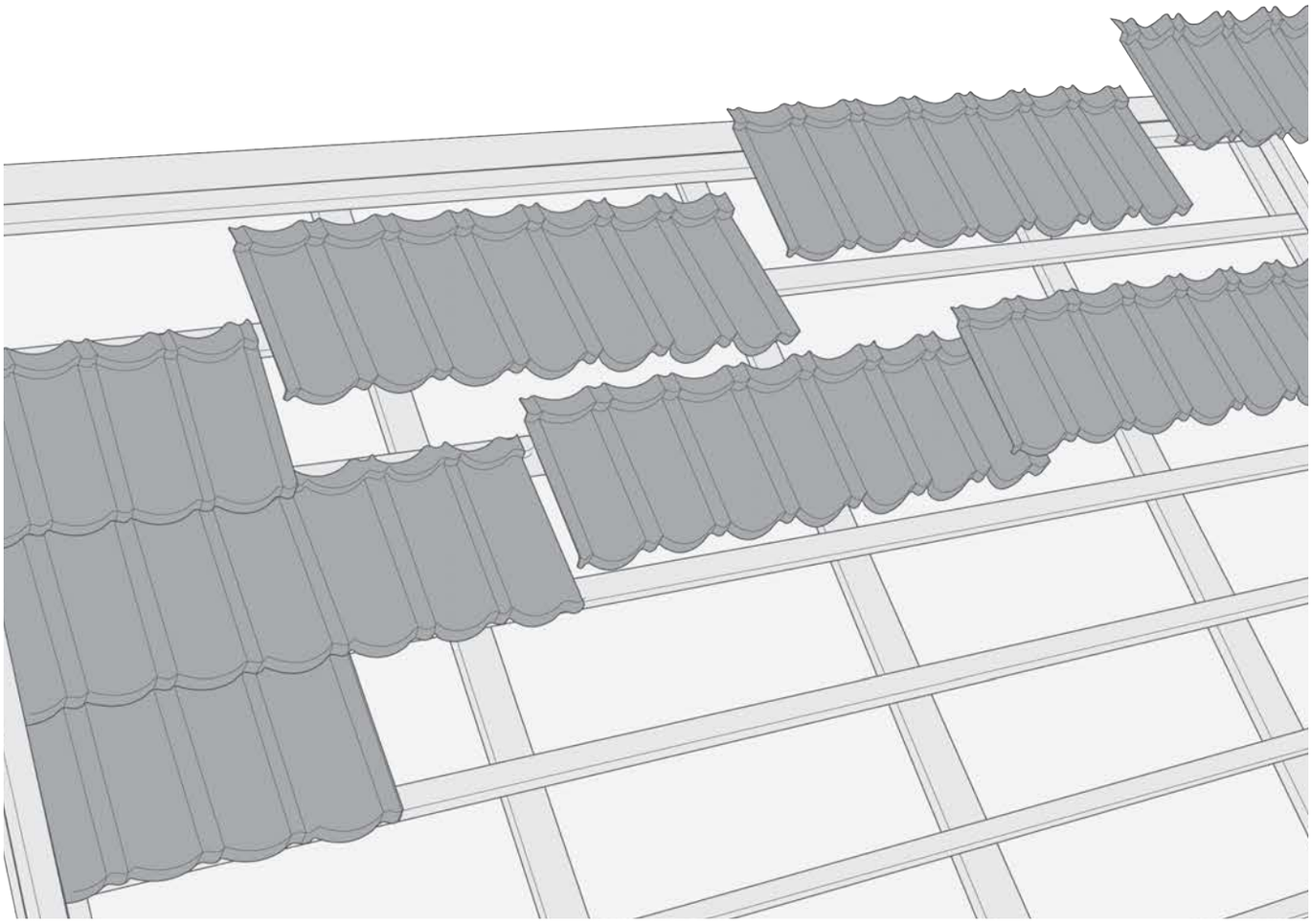

fig.18a INTERLACED INSTALLATION OF THE MODULES

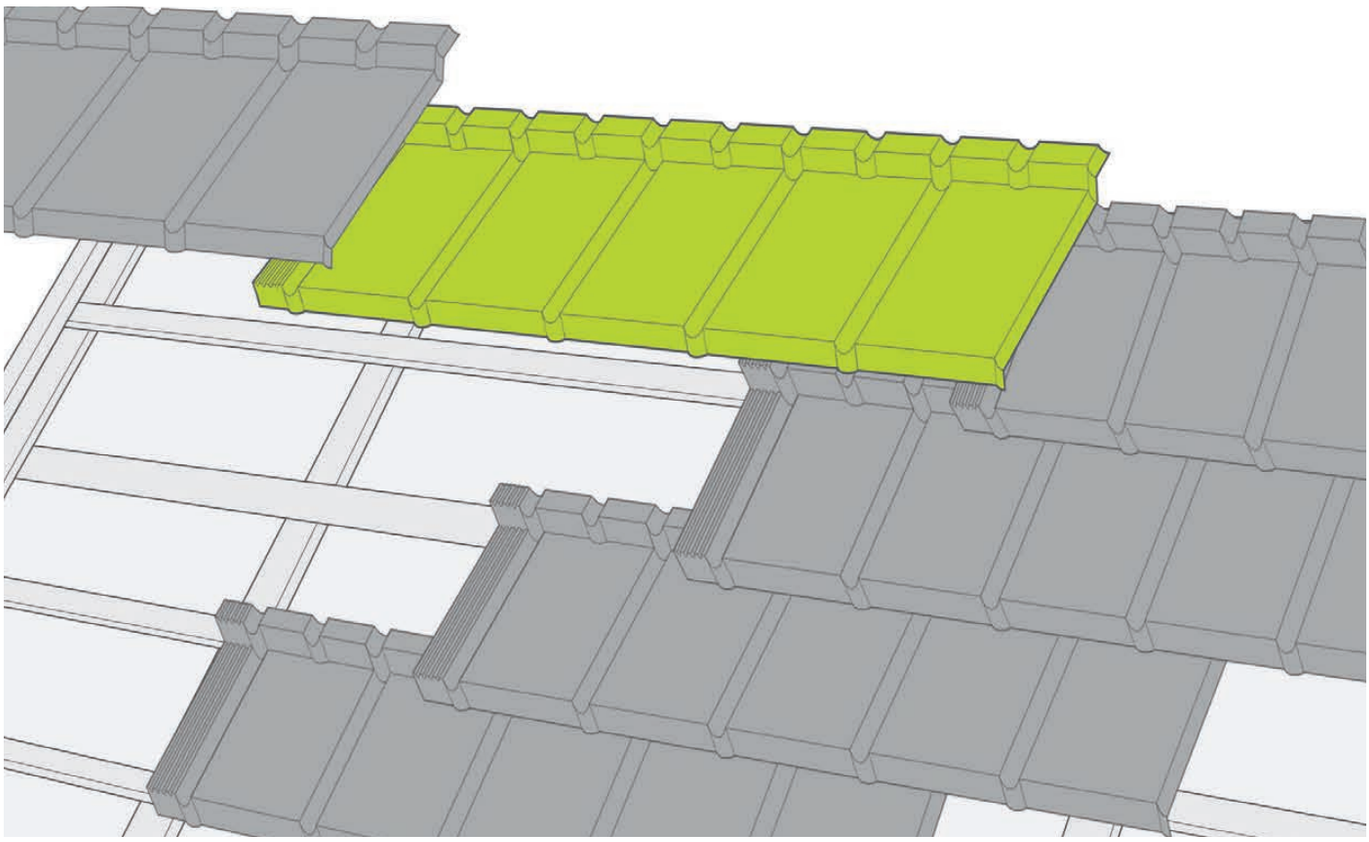

fig.18b INTERLACED INSTALLATION OF THE MODULES

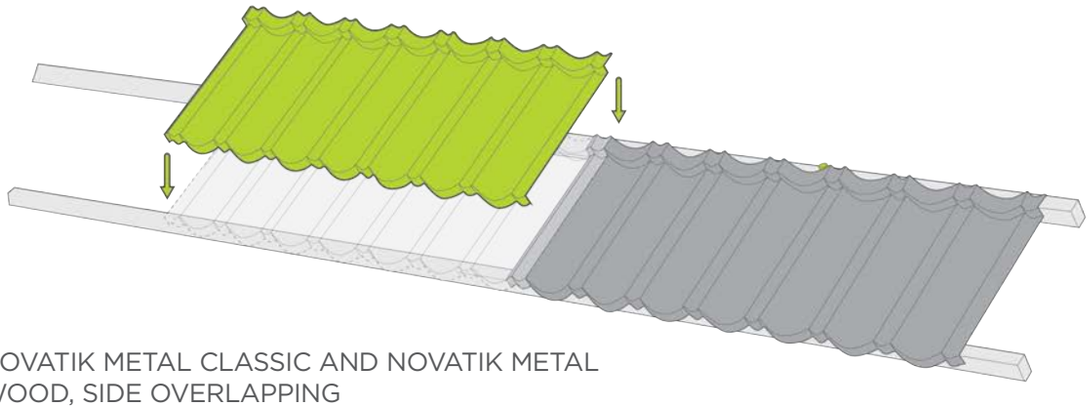

fig.19a NOVATIK METAL CLASSIC AND NOVATIK METAL WOOD, SIDE OVERLAPPING

MANUAL FIXING

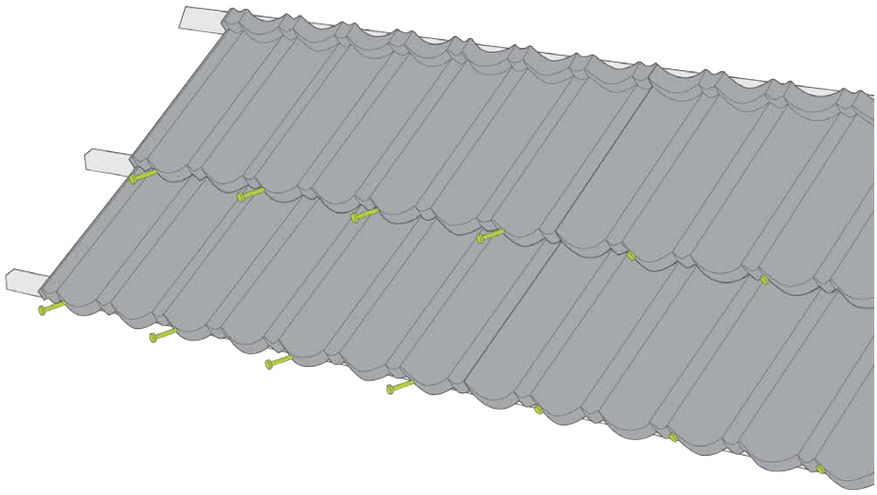

fig.20a NOVATIK METAL CLASSIC, NAILS FASTENING POINTS

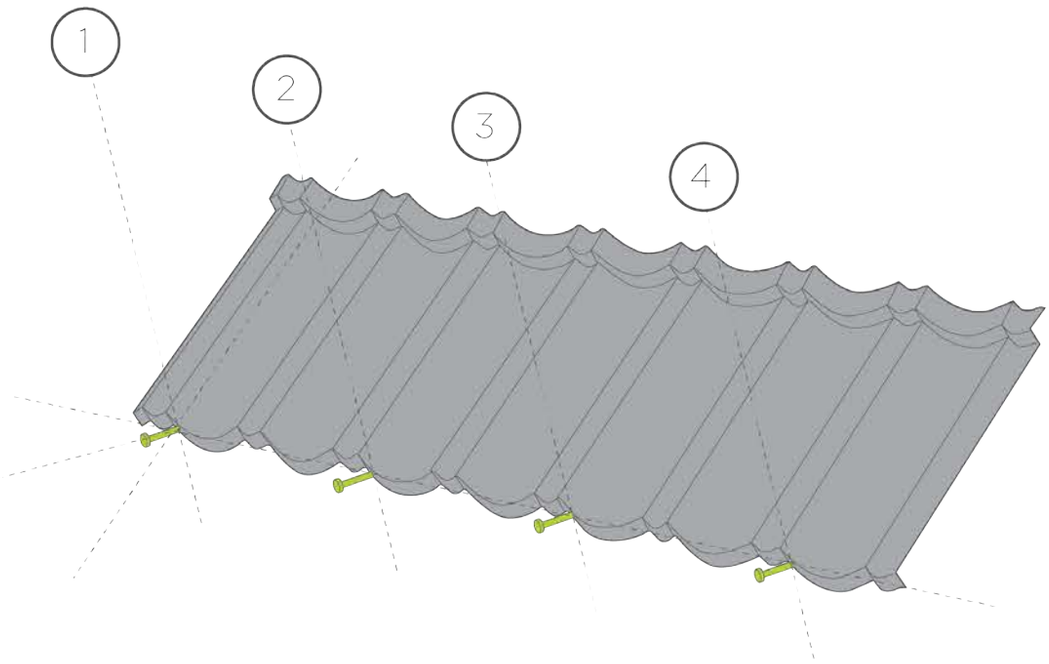

fig.21a NOVATIK METAL CLASSIC, FASTENING NAIL POSITIONS

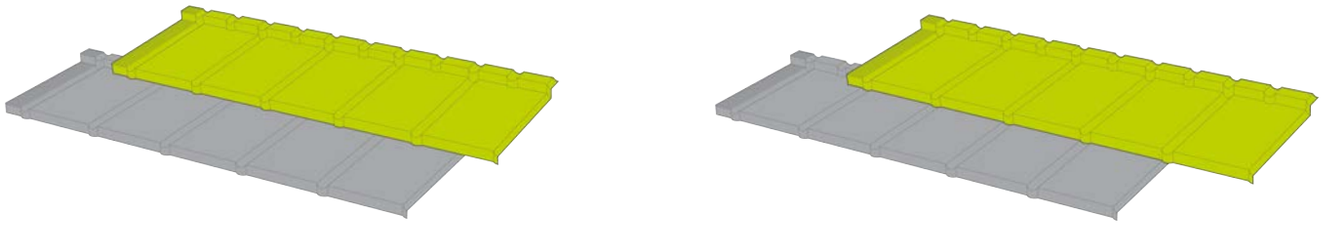

fig.19b NOVATIK METAL SLATE, INTERLACED AND LINEAR OVERLAPPING

NOVATIK METAL SLATE, NOVATIK NETAL KOLAJ AND NOVATIK METAL WOOD, FIXING USING ELECTRIC POWER DRILL

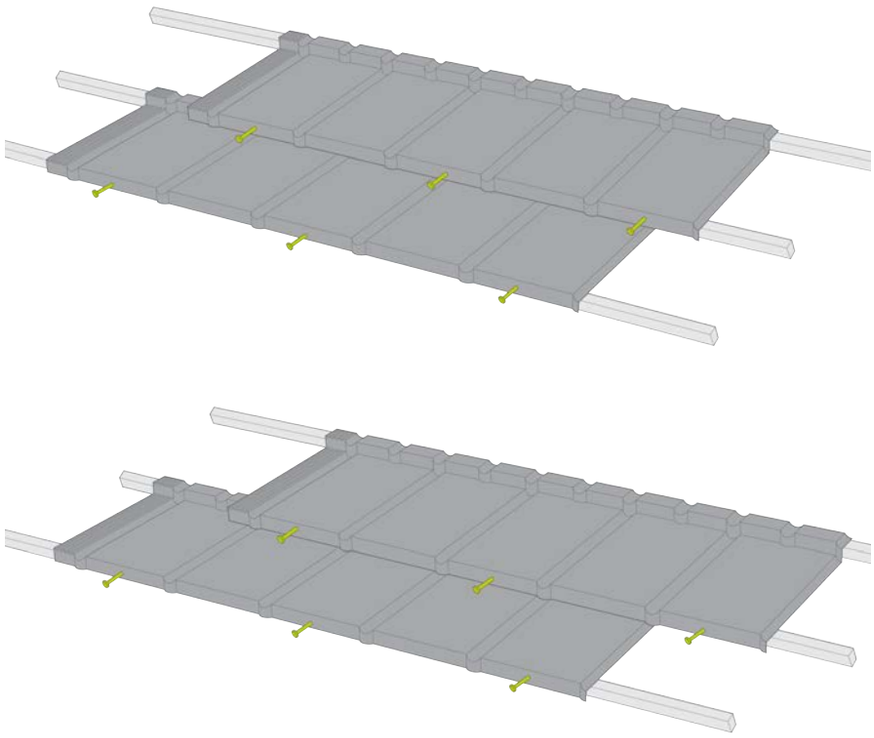

fig.20b NOVATIK METAL SLATE AND NOVATIK METAL WOOD, SCREWS FASTENING POINTS

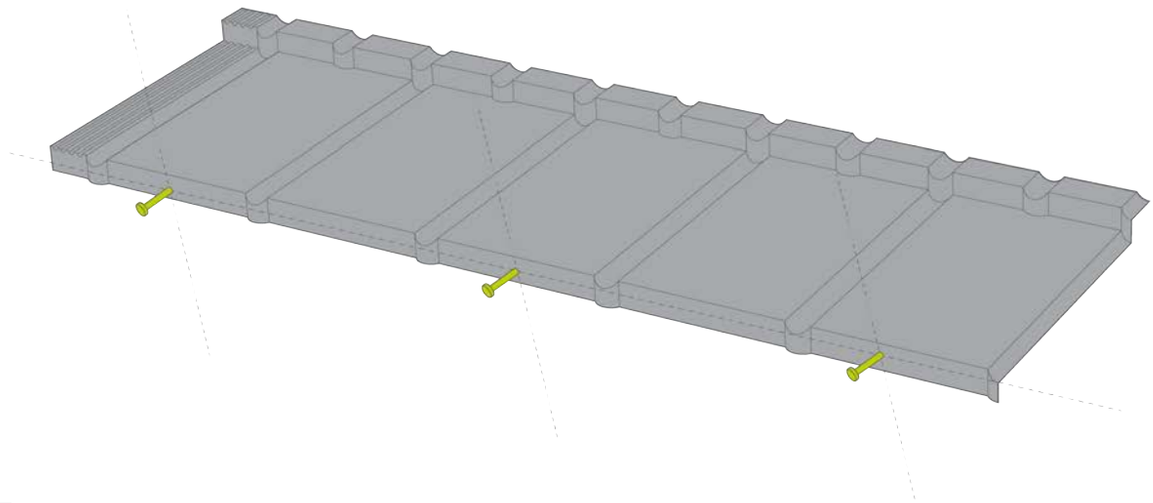

fig.21b NOVATIK METAL SLATE AND NOVATIK METAL WOOD, FASTENING SCREWS POSITIONS

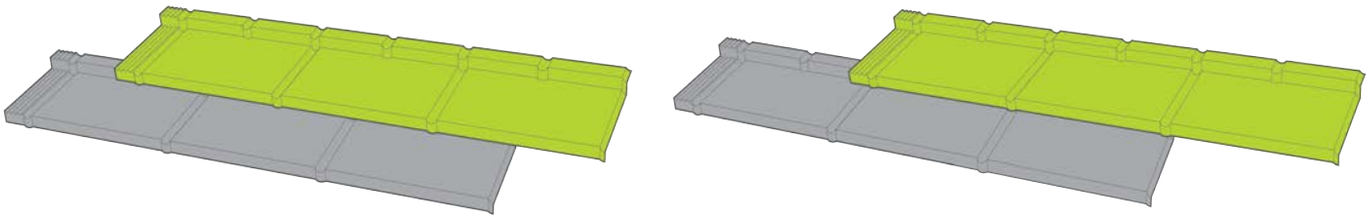

fig.19c NOVATIK METAL KOLAJ, INTERLACED AND LINEAR OVERLAPPING

NOVATIK METAL SLATE,
NOVATIK METAL KOLAJ
NOVATIK METAL WOOD
FIXING USING ELECTRIC
POWER DRILL

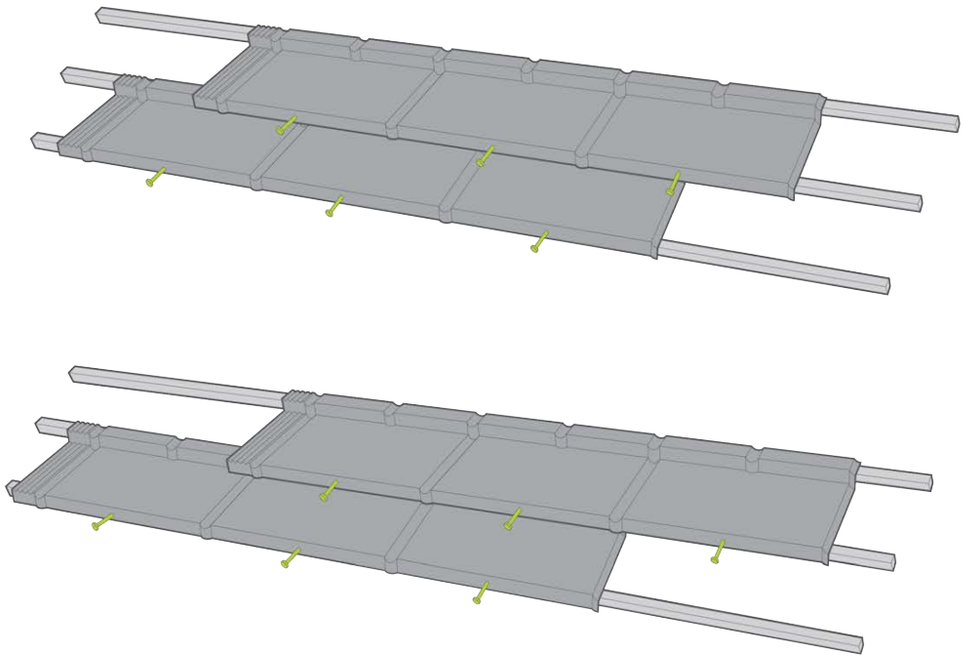

fig.20c NOVATIK METAL KOLAJ, SCREWS FASTENING POINTS

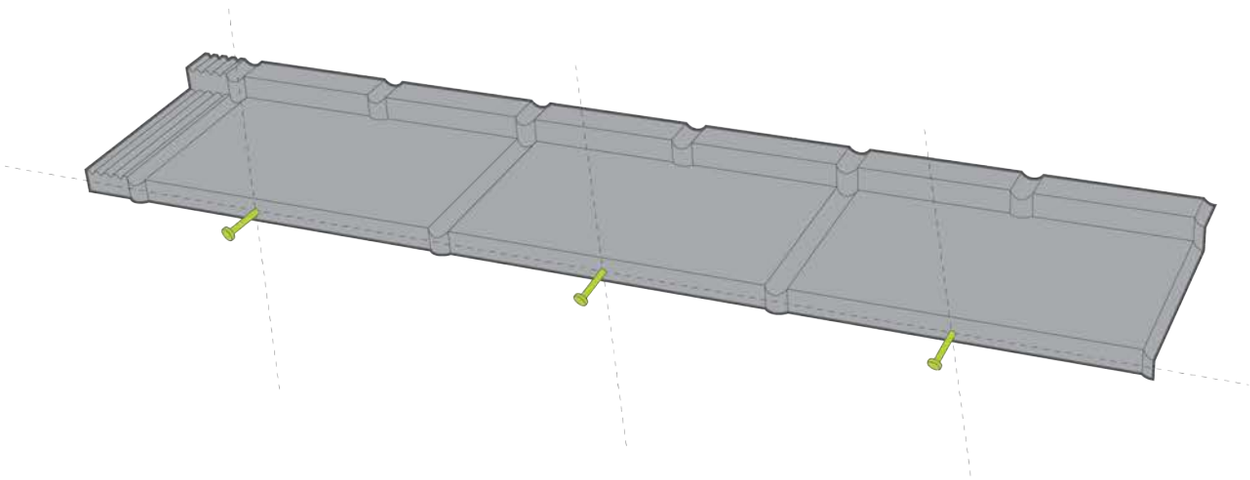

fig.21c NOVATIK METAL KOLAJ, FASTENING SCREW POSITIONS

The cut tiles used in the ridge, box barge, side (wall) flashing shall be bent approx. 40-50 mm upwards (fig. 22; 26; 27; 29; 30; 32; 35; 37; 38; 39) and downwards in the case of valleys (fig. 23).

The used cut tiles shall include at least one whole tile for secure installing. Bends shall be performed using a bender, hand bender or the rubber hammer.

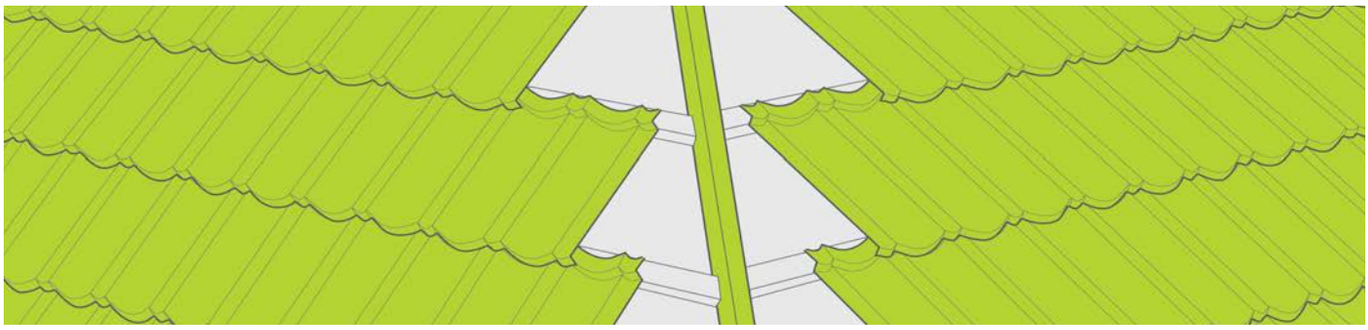

fig.22 INSTALLING TILES IN THE INCLINED RIDGE AREA

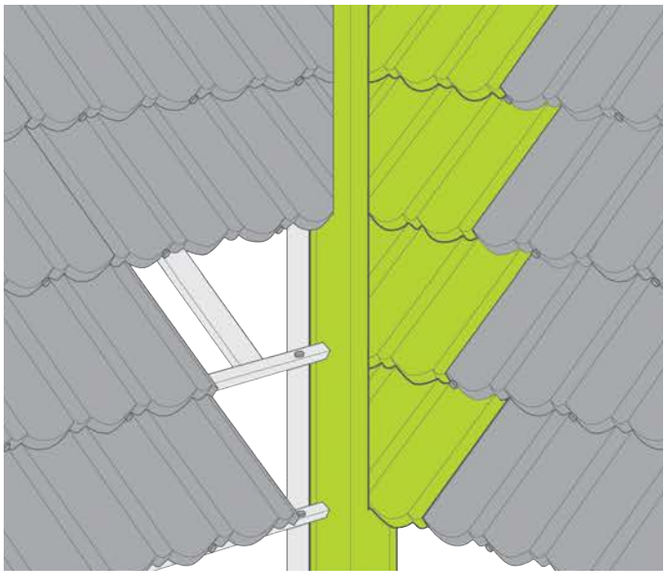

fig.23 INSTALLING AND BENDING TILES IN THE VALLEY AREA

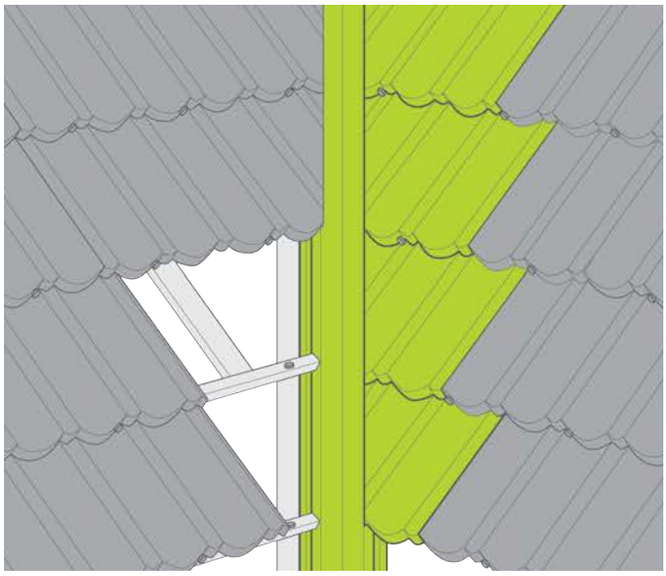

fig.24 INSTALLING TILES WITHOUT BENDING IN THE VALLEY AREA, WITH THE MANDATORY USE OF SEALING TAPE

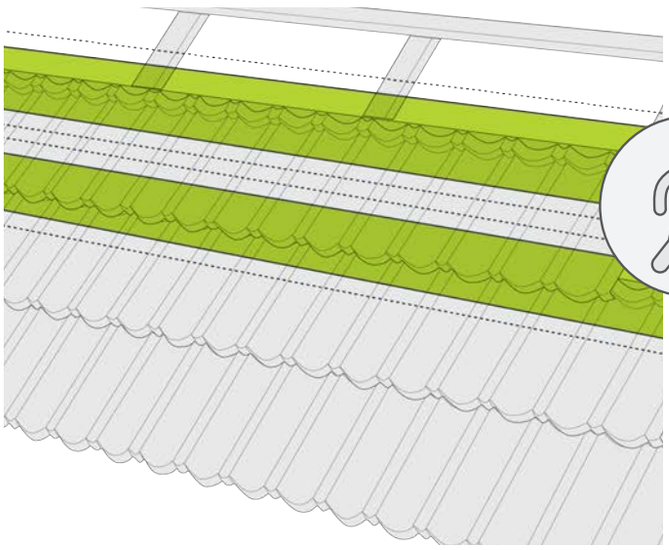

fig.25a RECOMMENDED AREAS FOR MODULES SURFACE NOVATIK METAL CLASSIC

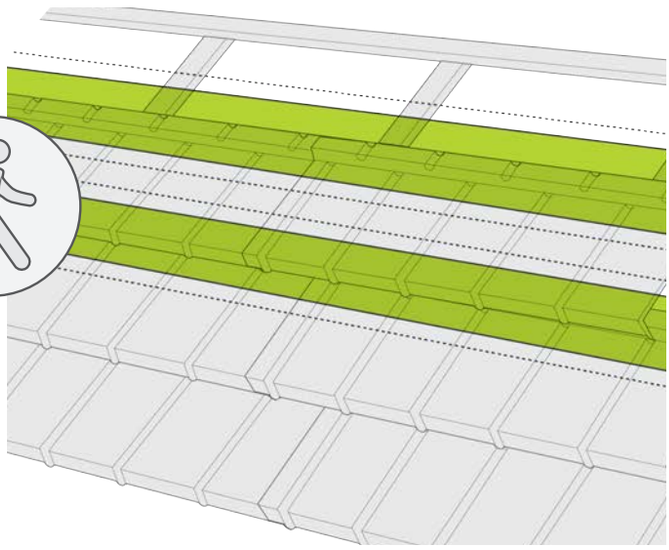

fig.25b RECOMMENDED AREAS FOR MODULES SURFACE NOVATIK METAL SLATE OR NOVATIK METAL WOOD

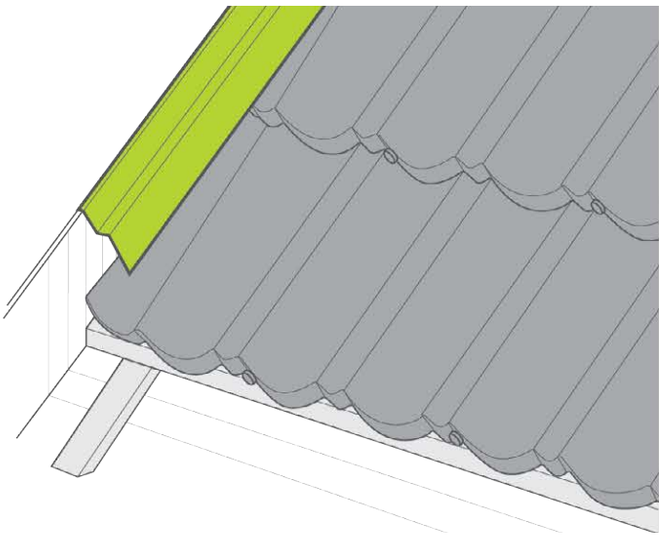

fig.26 FIXING WALL FLASHINGS

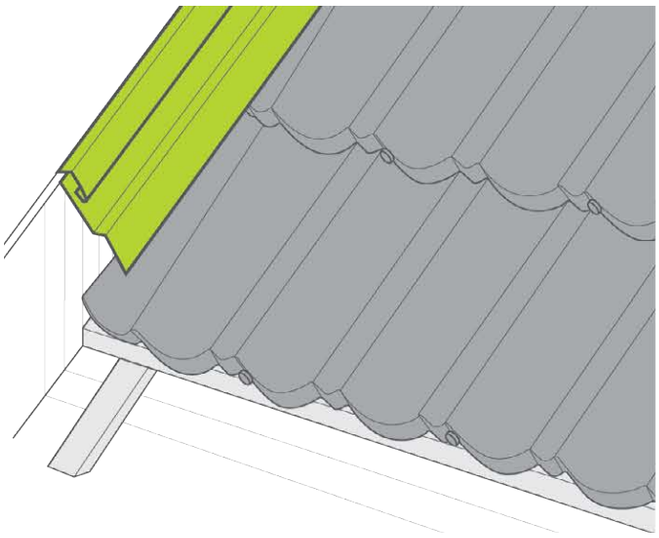

fig.27 INSTALLING WALL FLASHINGS (ALTERNATIVE)

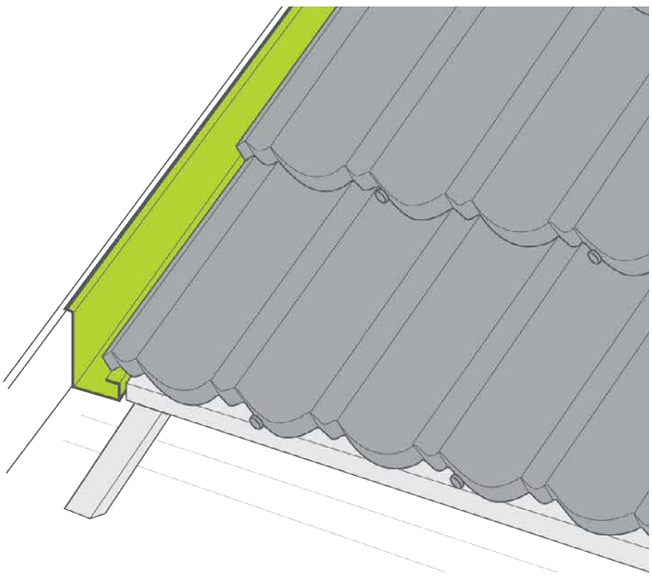

fig.28 INSTALLING OBLIQUE WALL FLASHINGS WITHOUT BENDING TILES VERSION

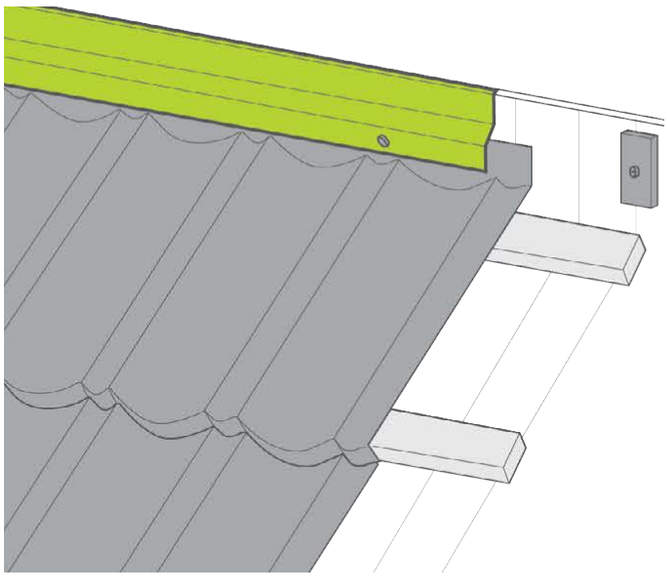

fig.29 FIXING HORIZONTAL FLASHINGS

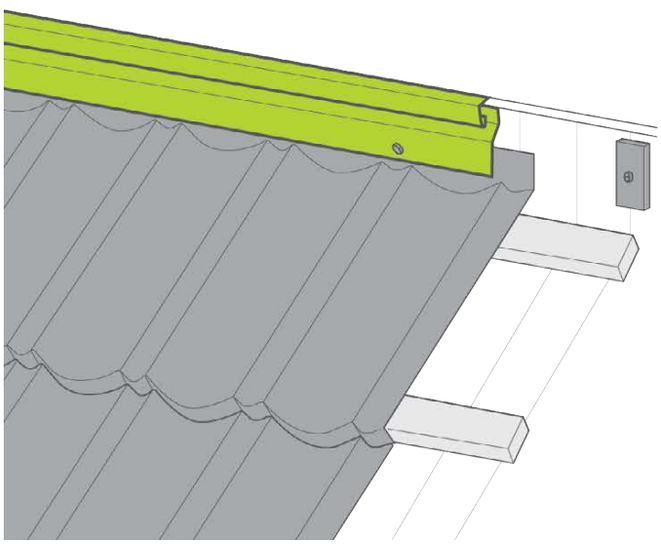

fig.30 FIXING HORIZONTAL FLASHINGS (ALTERNATIVE)

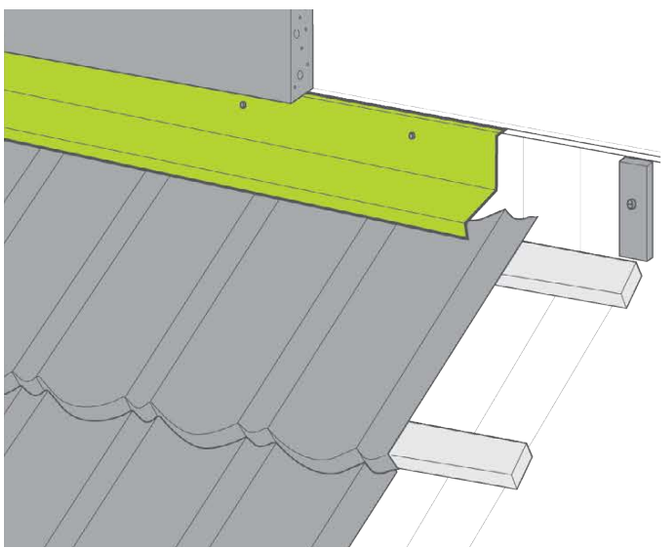

fig.31 FIXING HORIZONTAL WALL FLASHINGS WITHOUT BENDING TILES VERSION

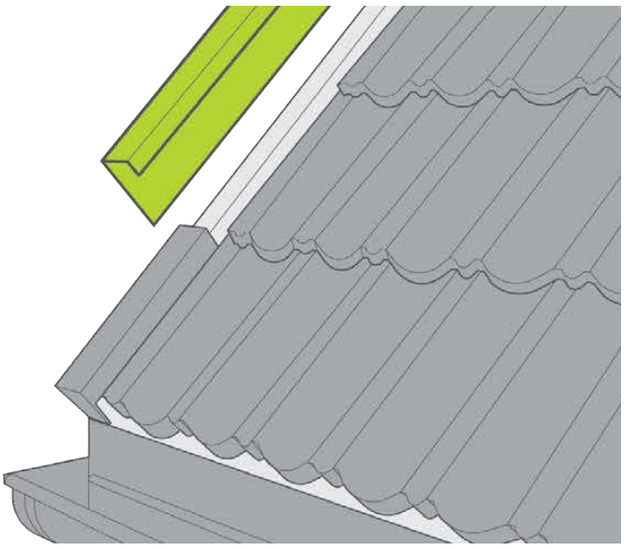

fig.32 INSTALLING FASCIA BOARDS

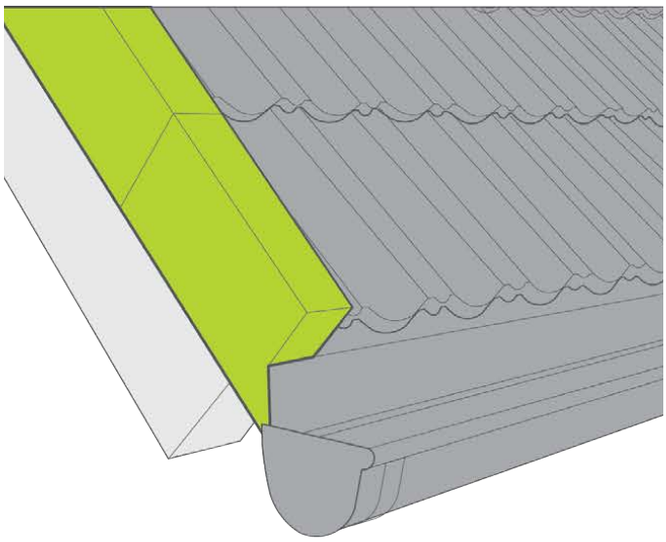

fig.33 INSTALLING FASCIA BOARDS TYPE 2 WITHOUT BENDING

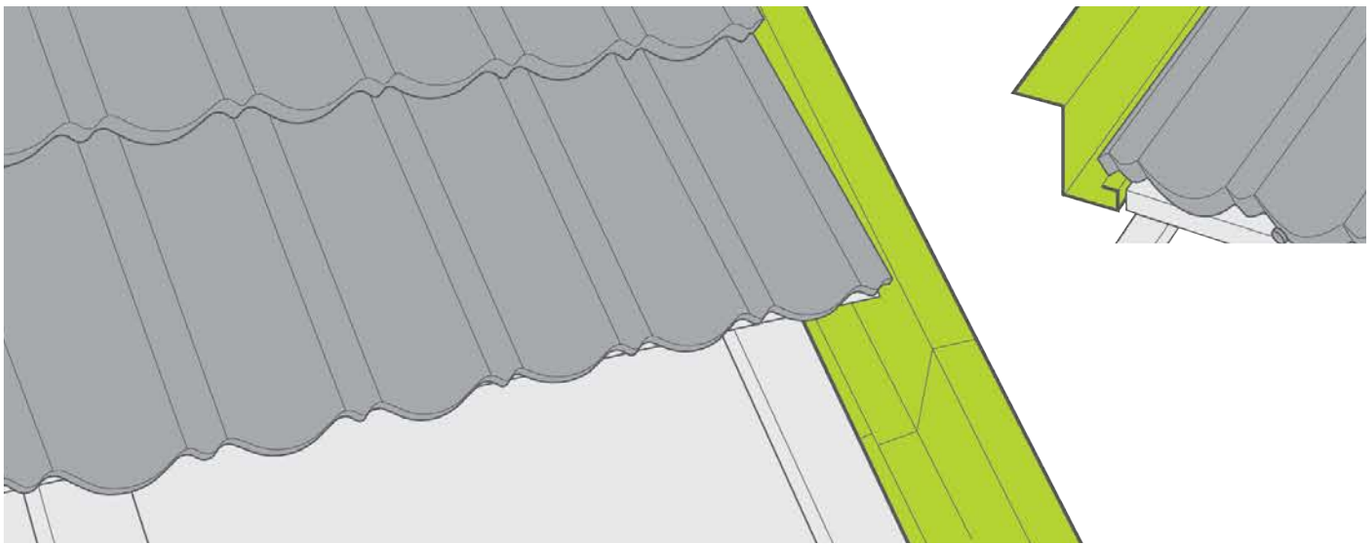

fig.34 INSTALLING SPECIAL FASCIA BOARDS WITHOUT BENDING

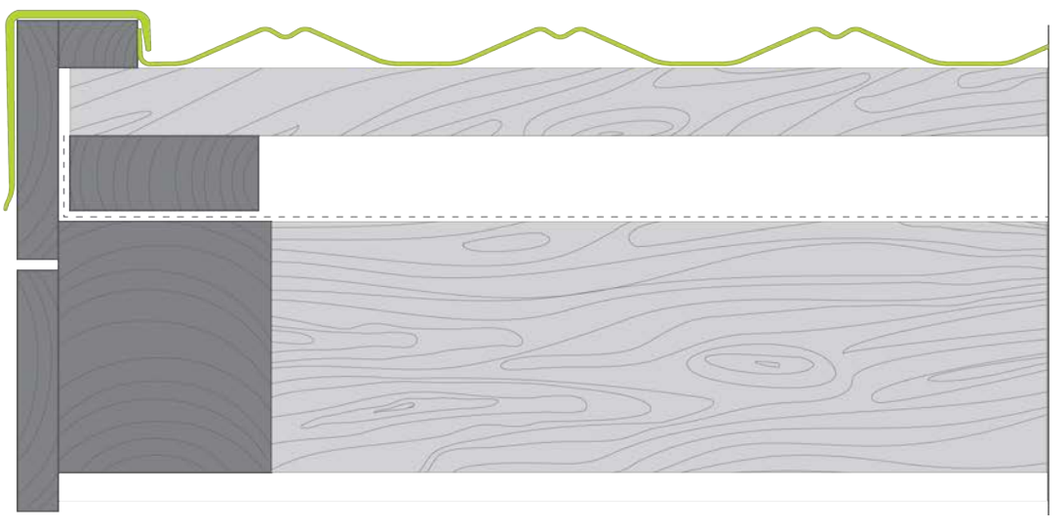

fig.35 INSTALLING TILES AT FASCIA BOARDS – SECTION

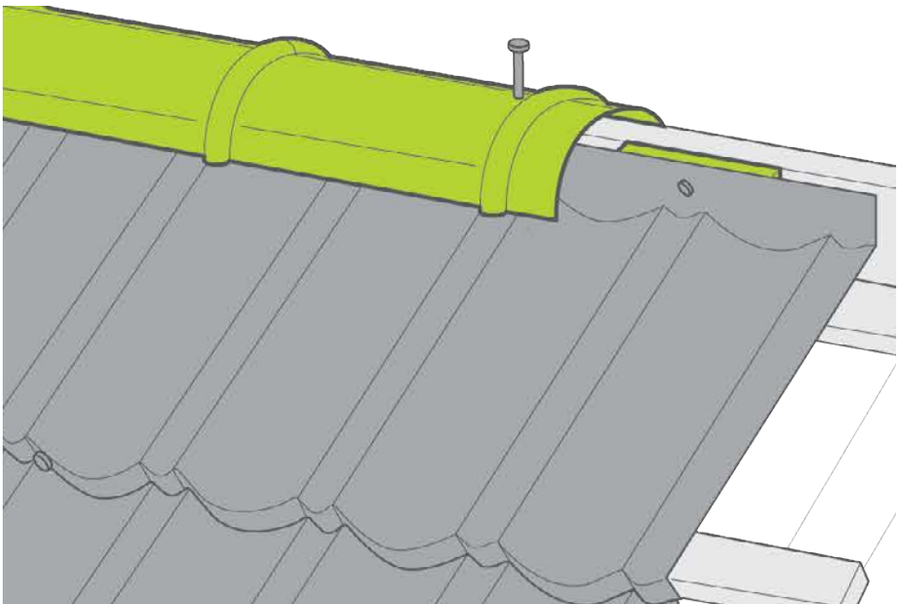

fig.36 HORIZONTAL RIDGE INSTALLATION

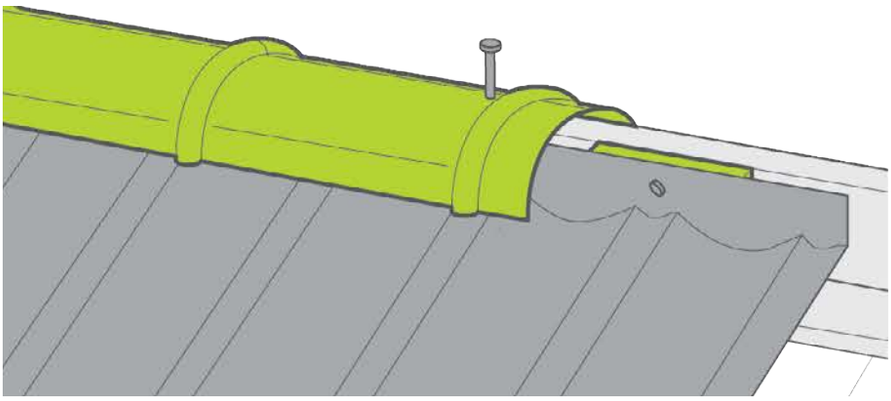

fig.37 HORIZONTAL RIDGE INSTALLATION. VENTILATION IMPROVEMENT ALTERNATIVE

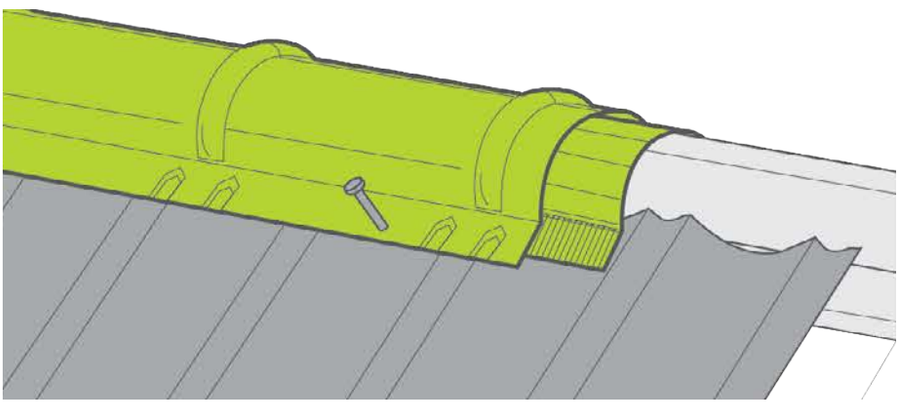

fig.38 BEVELED RIDGE TYPE 2 FIXING AND VENTILATION STRIP. WITHOUT BENDING VERSION

The last row is fixed in the horizontal ridge area. It will require the use of a bender and guillotine (or hand shears) because the space will be smaller than the module's 370 mm width (233 mm if Novatik METAL KOLAJ profile is installed). The distance from the last tile to the ride batten is measured and marked.
Bend to the desired angle, using a bender and cut 40-50 mm above the bending line. In the upper area, they shall be fastened to the ridge batten using nails (fig. 35-36). It is very important for the tile to be bent and then adjusted, avoiding deformation.

>INSTALLING ACCESSORIES

STEP 8

1. Fixing eaves flashing

– see fig. 5

2. Fixing wall flashing

– see fig. 29-34

3. Fixing barrel trim

– see fig. 36-38

4. Fixing box barges

– see fig. 32-35

5. Installing roof windows

Installation of the roof windows shall be performed according to the manufacturers instruction, with the observation that in case of the Novatik roofs the fastening supports have to be installed 20 mm above the level of the vertical battens.

The tiles mounted on the sides shall be bent downwards covering the sealing rubber strips. Fixing of tiles in the lower or upward area of the window. This situation can be avoided using tile offcuts.

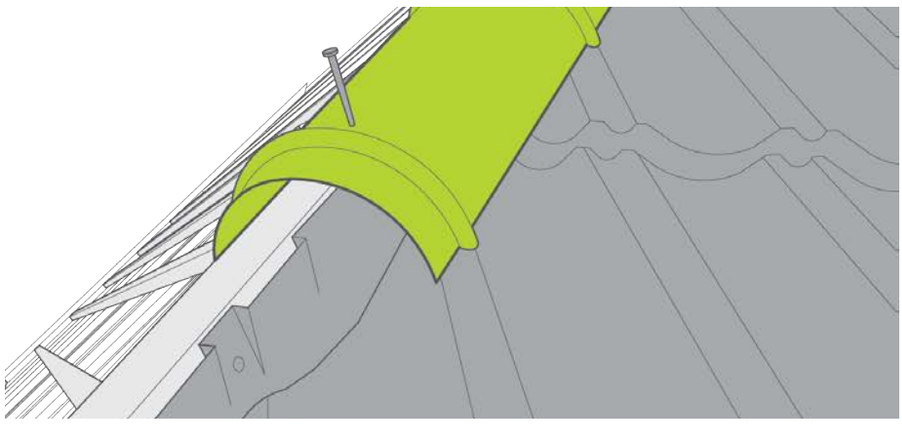

fig.39 BEVELED RIDGE FIXING

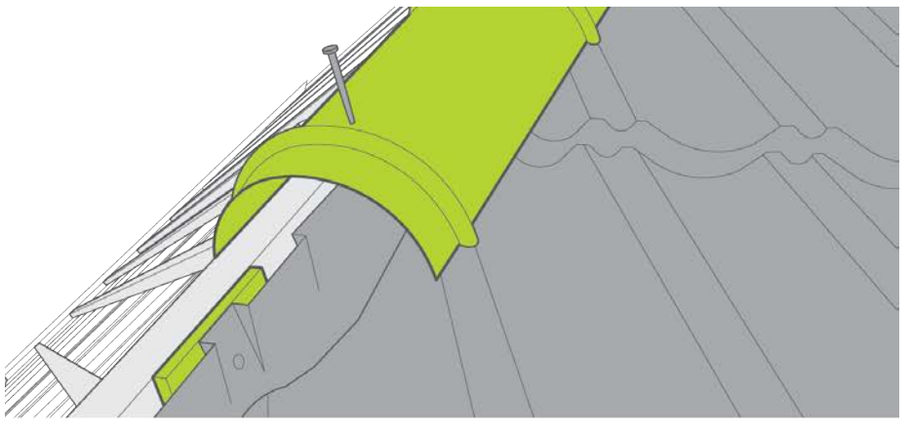

fig.40 BEVELED RIDGE FLEXING. VENTILATION IMPROVEMENT ALTERNATIVE

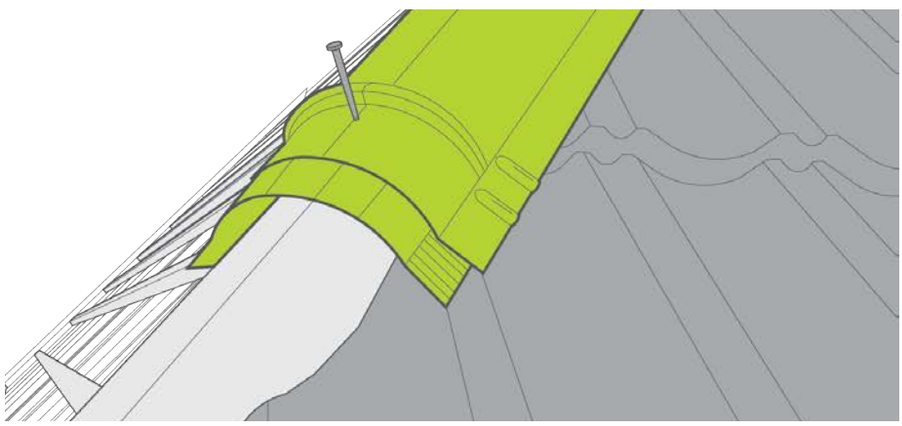

fig.41 BEVELED RIDGE TYPE 2 FLEXING. WITHOUT BENDING VERSION

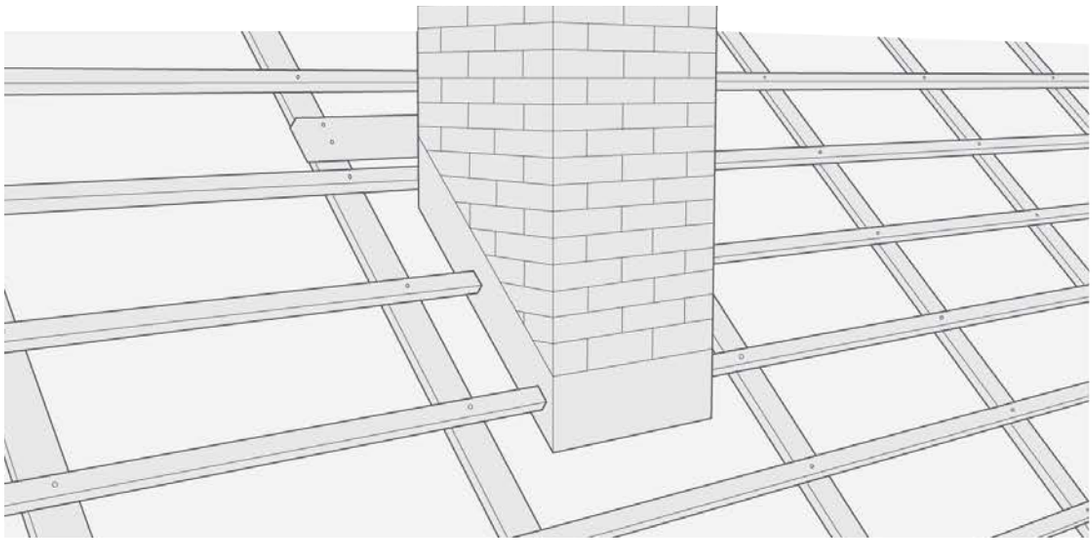

fig.42 CHIMNEY SEALING- STEP 1

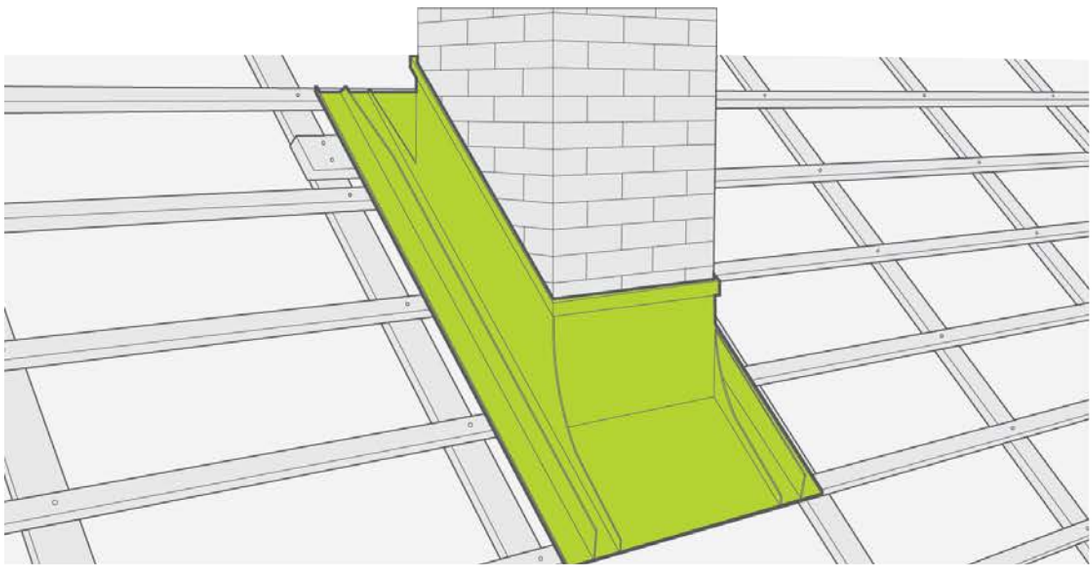

fig.43 CHIMNEY SEALING- STEP 2

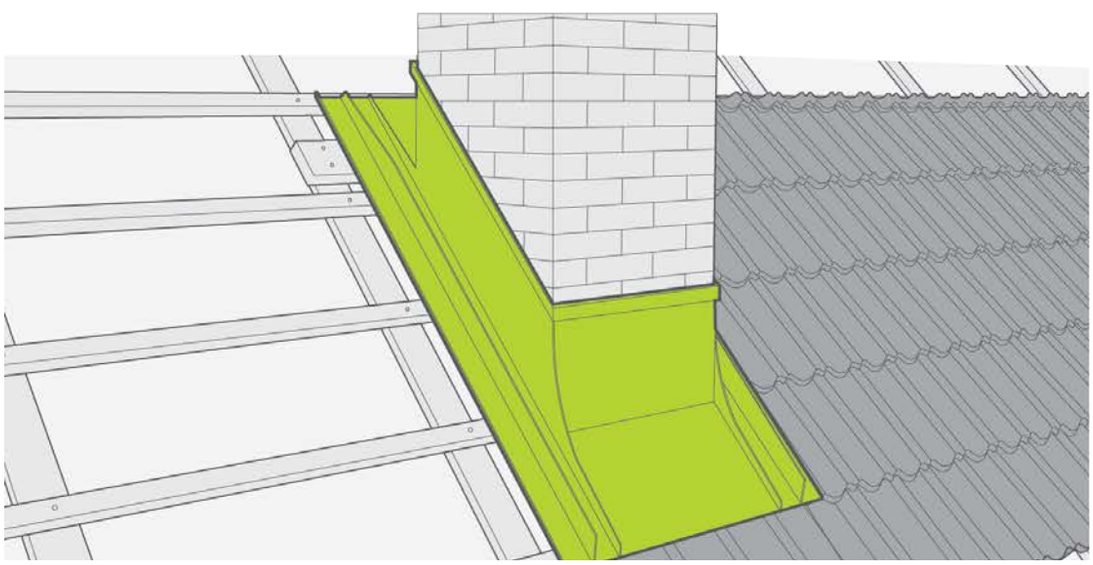

fig.44 CHIMNEY SEALING- STEP 3

>INSTALLING VENTILATION SYSTEMS

Novatik ventilations are easy to install by using a few simple fitting instructions. A very small adjustment is required, because the ventilation base plates already correspond to the sections on the Novatik panels. In snowy regions, where snow quantities are high, ventilation should always be protected against break-up or detachment

STEP 9

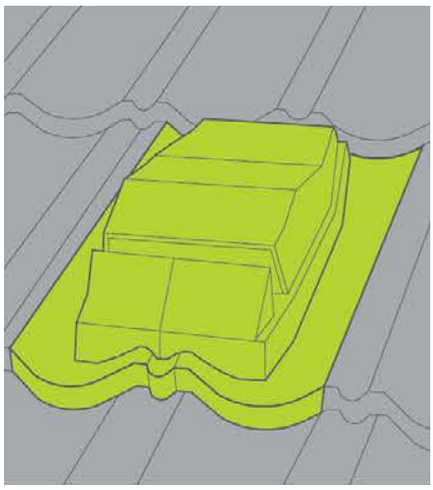

INSTALLING VENTILATION

>VENT/ SANITARY VENT

In case of natural ventilation (fig. 45) for optimum efficiency, it is important that the roof vents to be placed as close as possible to the ridge (maximum 1 meter by ridge). For mechanical ventilation (fig. 46), the vents location is less important. However, it is recommended for them to be located relatively close to the ridge. In those regions where there are large amounts of snow, the ventilation must be installed up to 1 meter away from the ridge and a snow stopper system installed above ventilation.

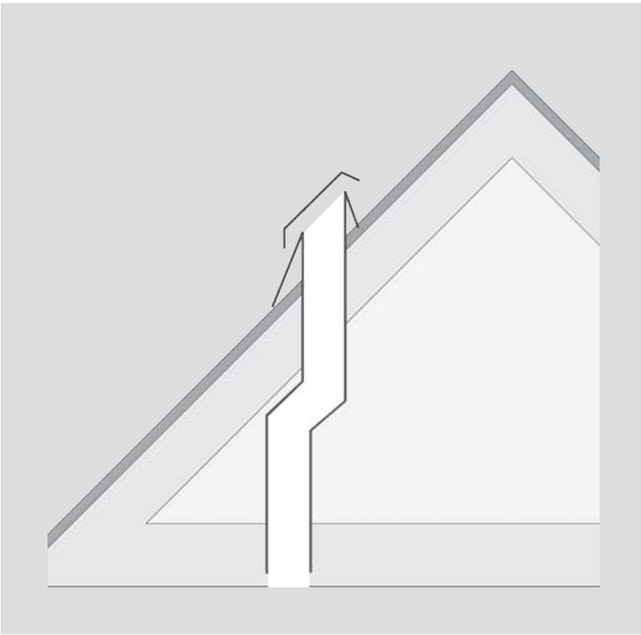

fig.45 INSTALLING VENTILATION

Optimum ventilation placement has to be as close as possible to the ridge (max. 1 meter from the ridge)

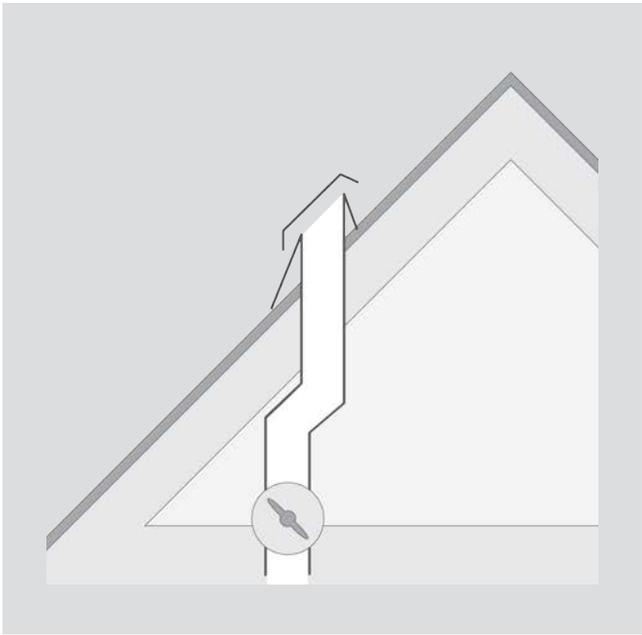

fig.46 MECHANICAL VENTILATION

For mechanical ventilation, the placement of ventilation/airway vents is not as strict, but it will be done as close as possible to the ridge.

>VENT

To remove the condensation and humidity from the space under the metal cover, it is important that ventilation to be continuous throughout the roof area, by ventilating each section. The most efficient way of ventilating is to provide a fresh airway at the eave, and an outlet near the ridge, through ventilation spaces or through field ventilation. Novatik ventilations are installed between two steel panels. After being sealed using a butylic strip or mastic then it's overlayed with the Novatik roof panels onto the base of the ventilation on both sides and then fastened with screws or nails.

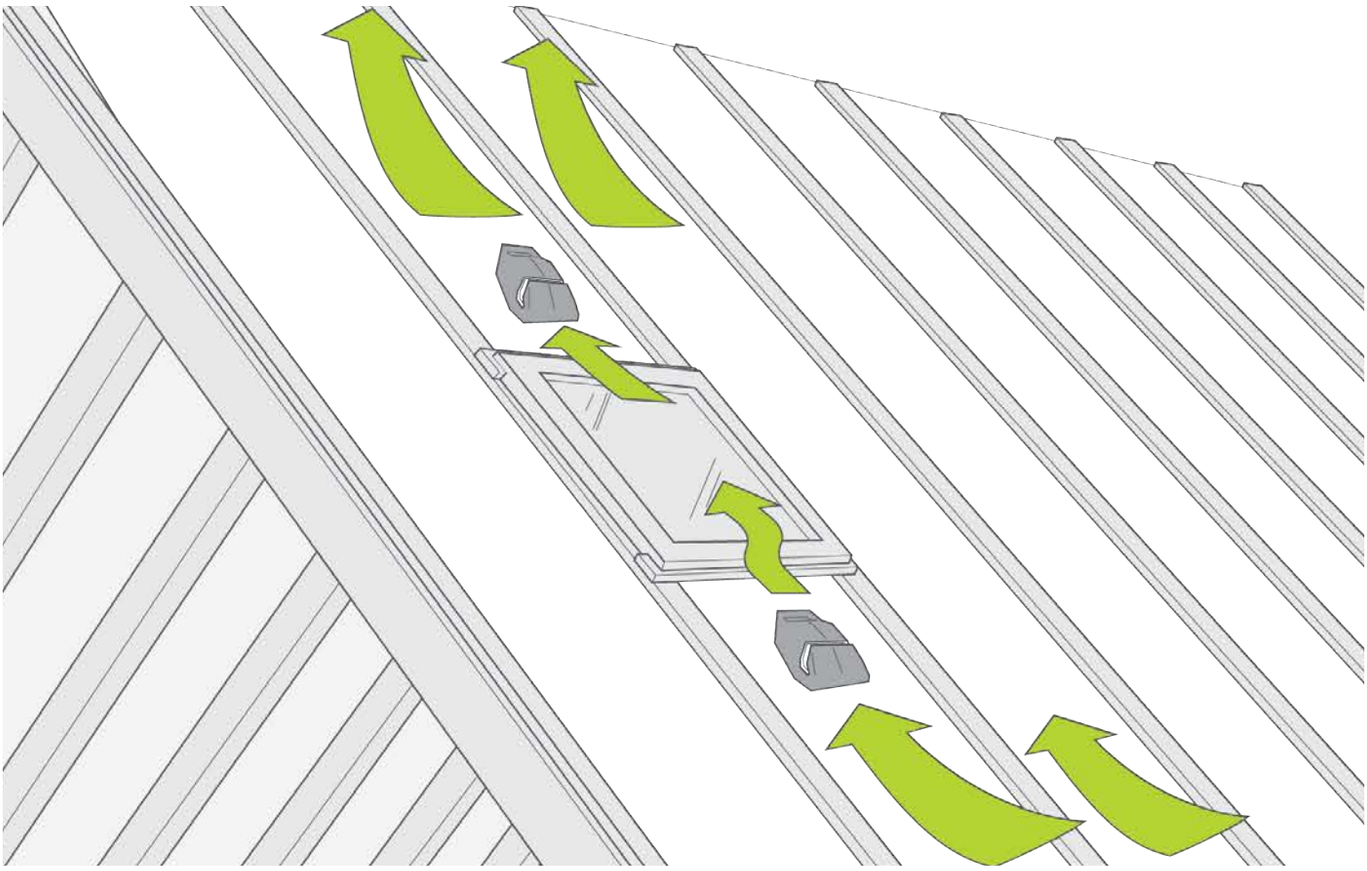

>INSTALLING SNOW STOPPERS

STEP 10

Novatik snow stoppers are used to prevent the danger caused by the fall of snow and ice from the roof. They can also protect various parts of the roof structure. Snow stopper systems must be placed as close to the eaves as possible, so that the weight can be completly unloaded into the walls of the stoppers where the roof support structure is.

Snow stoppers must withstand a minimum load of 5 kN/ m in the direction of the the drifting snow. Novatik snow stoppers provided in the instructions meet these requirements, this being proved by product certificate C262/03 granted by the VTT Technical Research Center in Finland. Snow stoppers system meets the requirements specified in the RT 85-10708 (Building Information Foundation RTS) file. To ensure that the snow protection systems and their fastening on the roof structure comply with the requirements referred to above, the sizing and installation of the system must be based on the following installation instructions.

>SIZING

A general rule for required sizing of the snow stoppers system is that a roof surface of less than 6 meter length requires a row of snow stoppers near the gutter, and the roof surfaces with a length of more than 6 meters requires a row of snow stoppers close to the gutter and another at half of the length of the roof surface (maximum 12 meters).

If snow stoppers are installed only above the entrance of the builduings or only on one side of the roof, it must be paid extra attention to the sizing and fixing. For example, if a 3 meter long snow stopper is installed above an entrance, a minimum of four mounting pads should be installed so that the ends of the pipes or the “sigma” profiles do not exceed the mounting pads by more than 100 mm. Recommendation for the example above is to install more than one row of snow stoppers on roofs with less than 6 meters in length.

The buildings information file RT 85-10708 (Building Information Foundation RTS) includes a table showing the maximum allowable lengths of the roof panel that remains above the installed snow protection elements. This section describes the maximum nominal lengths of the roof areas remaining above the installed snow protection elements.

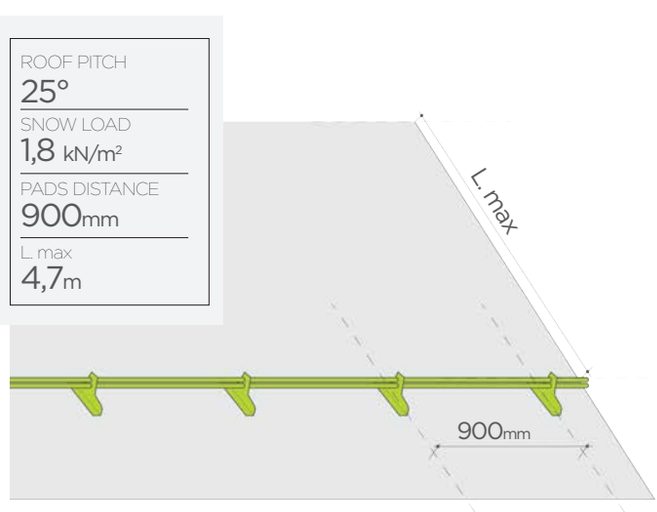

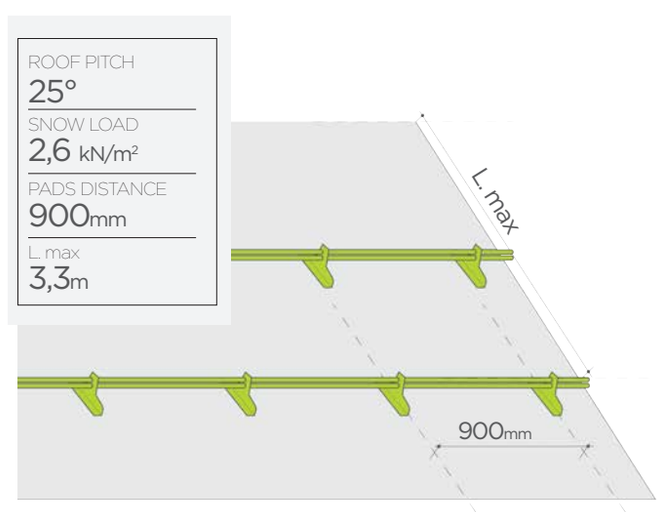

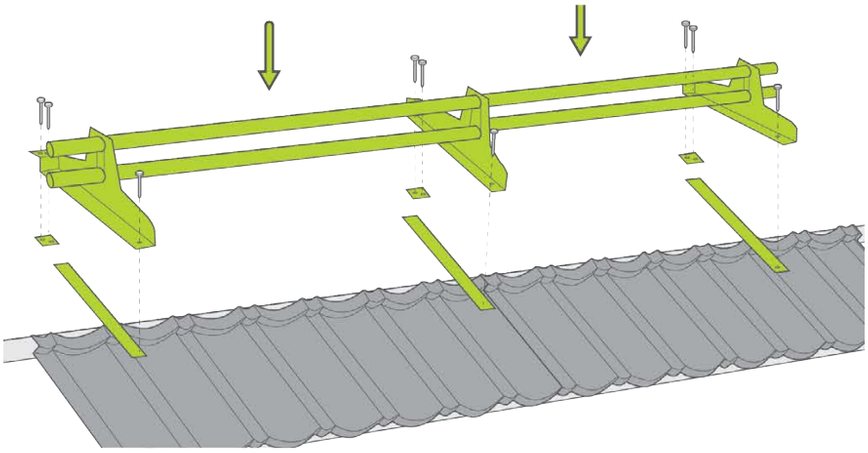

INSTALLING SNOW STOPPERS NOVATIK METAL CLASSIC

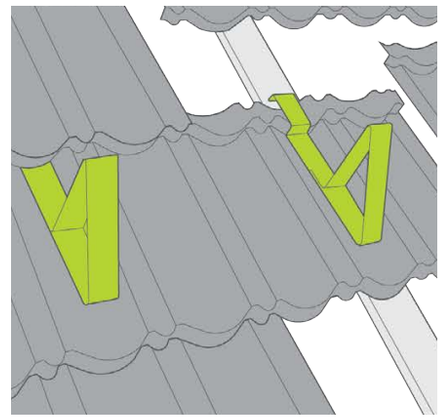

INSTALLING SNOW GUARDS

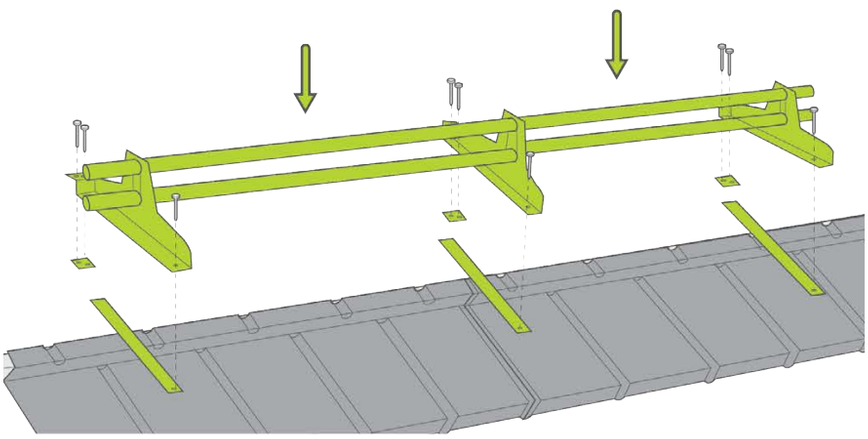

INSTALLING SNOW STOPPERS NOVATIK METAL SLATE

Table showing the maximum permissible lengths of roof surfaces that remain above the installed snow stoppers.

MAXIMUM LENGTH OF THE ROOF AREA (M) ABOVE THE SNOW STOPPERS

SNOW LOAD kN/m²	DISTANCE BETWEEN SNOW STOPPERS PADS mm	ROOF PITCH α (°)				
		α ≤ 15°	15° < α ≤ 22°	22° < α ≤ 27°	27° < α ≤ 37°	37° < α ≤ 45°
1,8 kN/m²	600mm	18,0m	9,5m	7,0m	6,2m	7,5m
	900mm	12,0m	6,3m	4,7m	4,1m	5,0m
	1200mm	9,0m	4,8m	3,5m	3,1m	3,7m
2,6 kN/m²	600mm	12,5m	6,6m	4,8m	4,3m	5,2m
	900mm	8,3m	4,4m	3,3m	2,8m	3,5m
	1200mm	6,2m	3,3m	2,4m	2,1m	2,6m

Snow stoppers must withstand a minimum load of 5 kN/m in the direction of the drifting snow. The nominal values in the table follows these requirements.

>FINISHING

Check that all tiles and accessories were correctly installed. If minor damages appear during instalation, they can be easily fixed using the touch-up spray.

STEP 11

>HANDOVER OF THE WORK AND ACCEPTANCE DOCUMENTATION

STEP 12

NOVATIK® HELPS YOU STAND OUT

This guide was created to help you install interlocking steel roof systems Novatik METAL. The guide offers step-by-step details for correct tile installation. The guidelines in this manual should be regarded as recommendations only, the liability for the installation is held by individual installers. This guide includes almost all possible on-site situations. However, if you need additional support, our contact data is available on the back cover.

NOVATIK - REGISTERED TRADEMARK

NOVATIK SRL is the developer and manufacturer of Novatik METAL (interlocking steel roof systems), Novatik NATURA (interlocking steel roof systems, stone chip coated panels), Novatik CLICK (standing seam roofs), Novatik FALTZ (standing seam roofs) and rainwater systems Novatik RONDA (semi-round) and QUADRA (rectangular).
Novatik SRL is also the exclusive representative in Romania of DELTA roof protection membranes (anticondensation membrane, vapour barriers).

Our vision is to be the leader of the romanian market premium solutions for roofs by improving life quality of our customer.Our mission is to provide innovative, efficient, long lasting and aesthetically pleasing roofing products, together with the highest customer satisfaction. We aim to work closely with our customers, resolve problems and build trust and total confidence in our company and our products.

Novatik®

Manufactured by: NOVATIK SRL
HEAD QUARTERS: 9 Mai street, no. 75,
105200 Băicoi, Prahova,România
Tel: +40 244 260 140;
Fax: +40 244 260 145
office@novatik.ro
novatik.ro